VENTICELLO WASHBASIN RECTANGLE

PRODUCT INFORMATION

Article title	Villeroy & Boch Venticello Washbasin, 655 x 500 x 170 mm, Stone White CeramicPlus, with overflow
Article number	412465RW
Assembly / Assembly type	wall-mounted
Scope of delivery	1 x washbasin
Depth in mm	500
Width in mm	655
Height in mm	170
Interior depth	120
Collection	Venticello
Suitable for	3-hole mixer, Matching Villeroy&Boch furniture
Material	Sanitary ceramics
surface	matt
Colour name	Stone White CeramicPlus
With overflow	Yes
Shape	Rectangle
Colour designation	Stone White
Antibacterial surface (with AntiBac)	No
Easy surface cleaning (CeramicPlus)	Yes
Number of tap holes punched through	1
Number of tap holes pre-drilled	2
Number of bowls	1

TECHNICAL DRAWINGS

412465RW

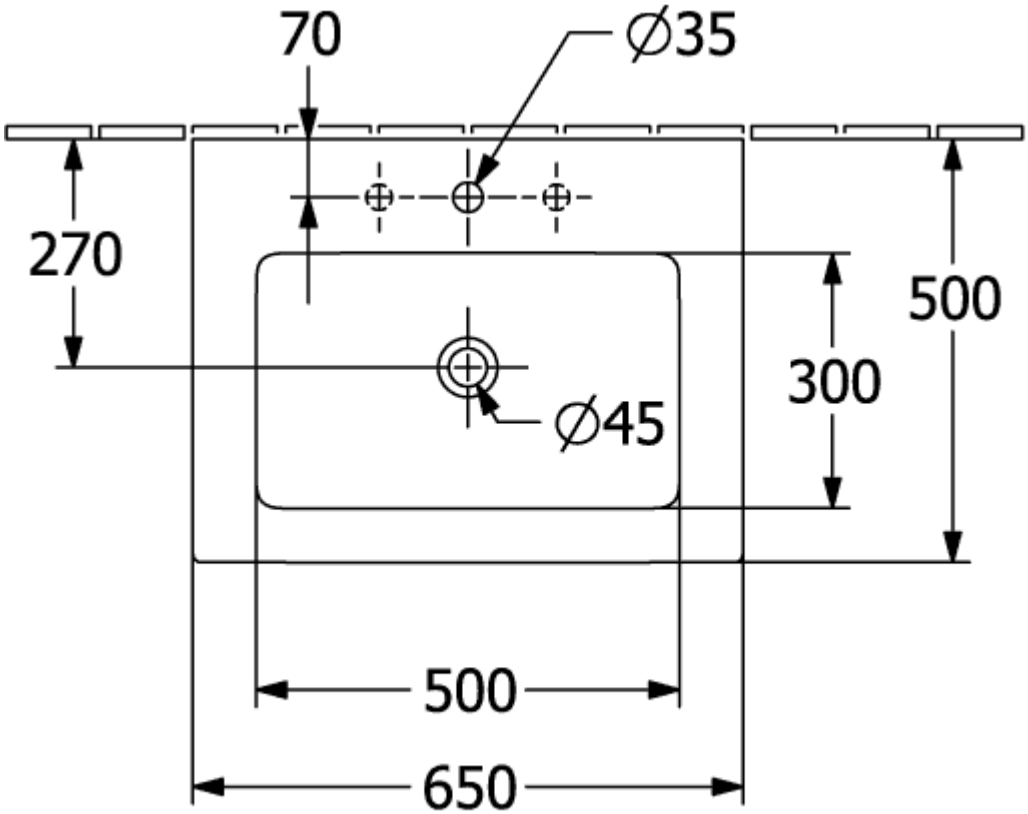
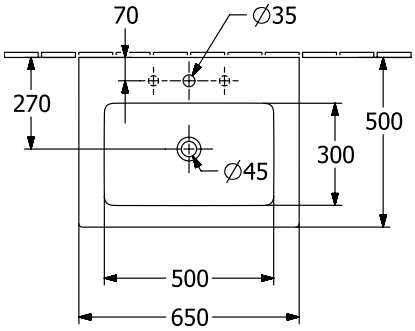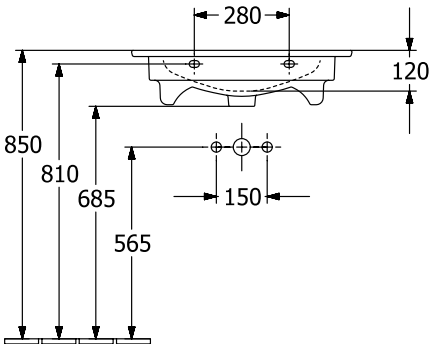
412465RW