MEMENTO 2.0 WASHBASIN RECTANGLE

PRODUCT INFORMATION

Article title	Villeroy & Boch Memento 2.0 Washbasin, 800 x 470 x 140 mm, White Alpin, without overflow, ground
Article number	4A228L01
Assembly / Assembly type	wall-mounted
Scope of delivery	1 x washbasin , 1 x cut-out template
Depth in mm	470
Width in mm	800
Height in mm	140
Interior depth	95
Collection	Memento 2.0
Tap fitting / Tap hole information	A non-closing valve or the ViFlow (concealed overflow) must be used for models without overflow function.
Suitable for	3-hole mixer, Matching Villeroy&Boch furniture
Material	TitanCeram
surface	glossy
Colour name	White Alpin
With overflow	No
Shape	Rectangle
Colour designation	White Alpin
Antibacterial surface (with AntiBac)	No
Easy surface cleaning (CeramicPlus)	No
Number of tap holes punched through	1
Number of tap holes pre-drilled	2
Underside of washbasin	ground
Number of bowls	1

TECHNICAL DRAWINGS

4A228L01

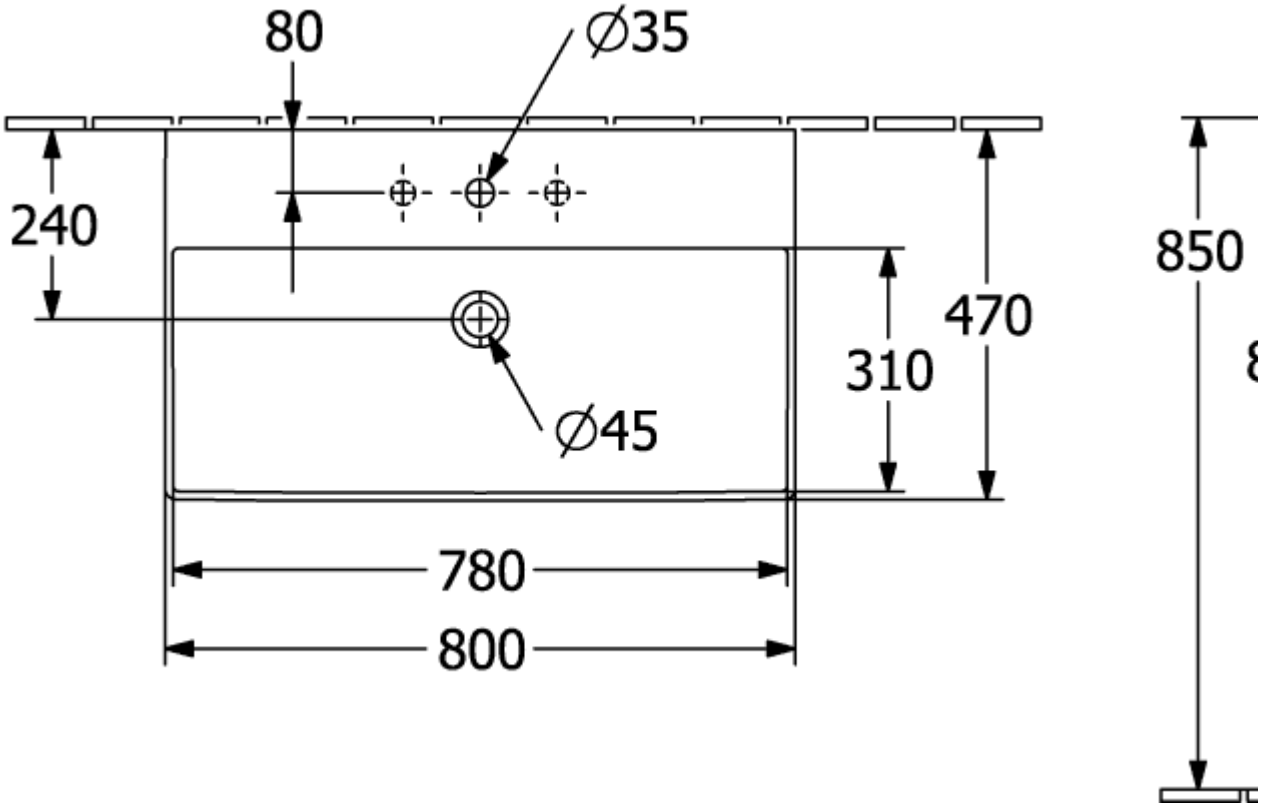
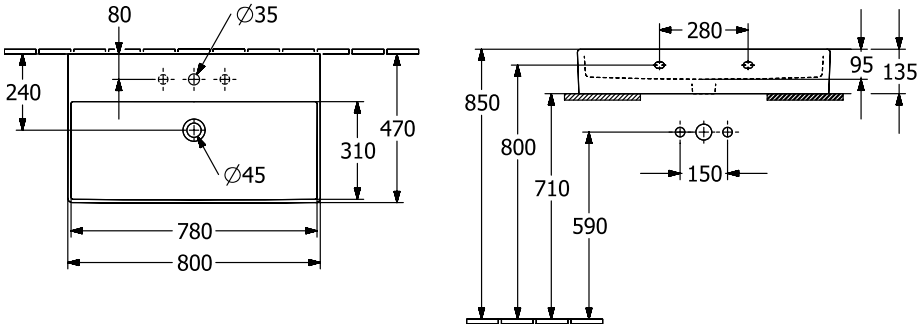
4A228L01