MEMENTO 2.0 WASHBASIN RECTANGLE

PRODUCT INFORMATION

Article title	Villeroy & Boch Memento 2.0 Washbasin, 1200 x 470 x 150 mm, White Alpin, with overflow, ground
Article number	4A22CK01
Assembly / Assembly type	wall-mounted
Scope of delivery	1 x washbasin , 1 x cut-out template
Depth in mm	470
Width in mm	1200
Height in mm	150
Interior depth	95
Collection	Memento 2.0
Tap fitting / Tap hole information	with 2 single-lever mixers and turn-knob operation or in conjunction with toggle valve, as well as push-open valve, please do not exceed a flow rate of max. 7.5 l/min per tap fitting.
Suitable for	two 1-hole tap fittings, Matching Villeroy&Boch furniture
Material	TitanCeram
surface	glossy
Colour name	White Alpin
With overflow	Yes
Shape	Rectangle
Colour designation	White Alpin
Antibacterial surface (with AntiBac)	No
Easy surface cleaning (CeramicPlus)	No
Number of tap holes punched through	2
Underside of washbasin	ground
Number of bowls	1

TECHNICAL DRAWINGS

4A22CK01

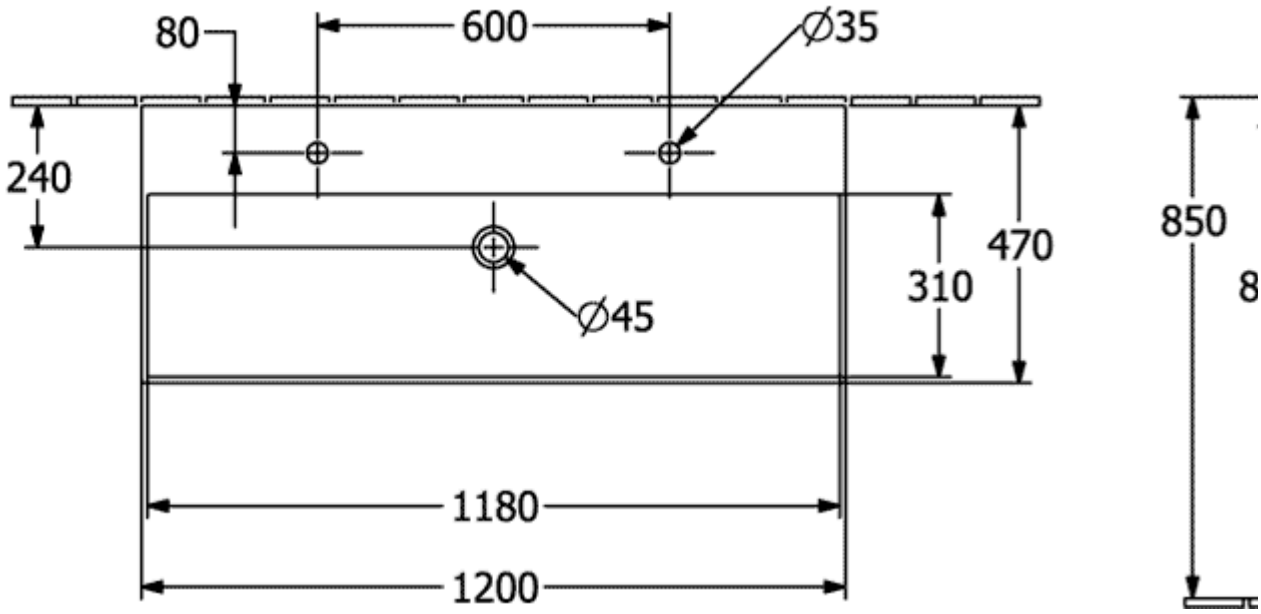
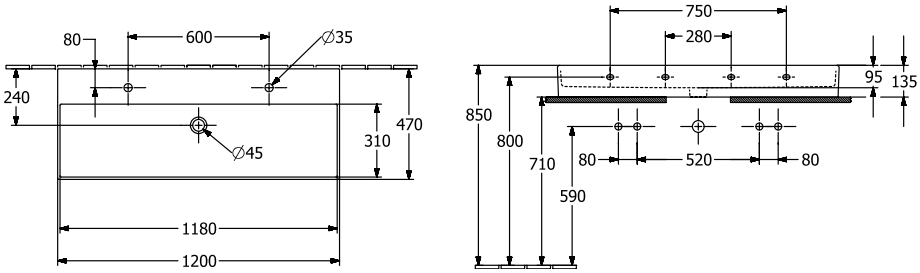
4A22CK01