COLLARO VANITY WASHBASIN RECTANGLE

PRODUCT INFORMATION

Article title	Villeroy & Boch Collaro Vanity washbasin, 1200 x 470 x 160 mm, White Alpin, without overflow
Article number	4A33C301
Assembly / Assembly type	wall-mounted
Scope of delivery	1 x vanity washbasin
Depth in mm	470
Width in mm	1200
Height in mm	160
Interior depth	85
Collection	Collaro
Tap fitting / Tap hole information	• when using a wall-mounted tap fitting, we recommend a projection of at least 210 mm • Please note: unclosable outlet valve must be used with models without overflow
Suitable for	Wall-mounted tap fittings, Matching Villeroy&Boch furniture
Material	TitanCeram
surface	glossy
Colour name	White Alpin
With overflow	No
Shape	Rectangle
Colour designation	White Alpin
Antibacterial surface (with AntiBac)	No
Easy surface cleaning (CeramicPlus)	No
Number of bowls	1

TECHNICAL DRAWINGS

4A33C301

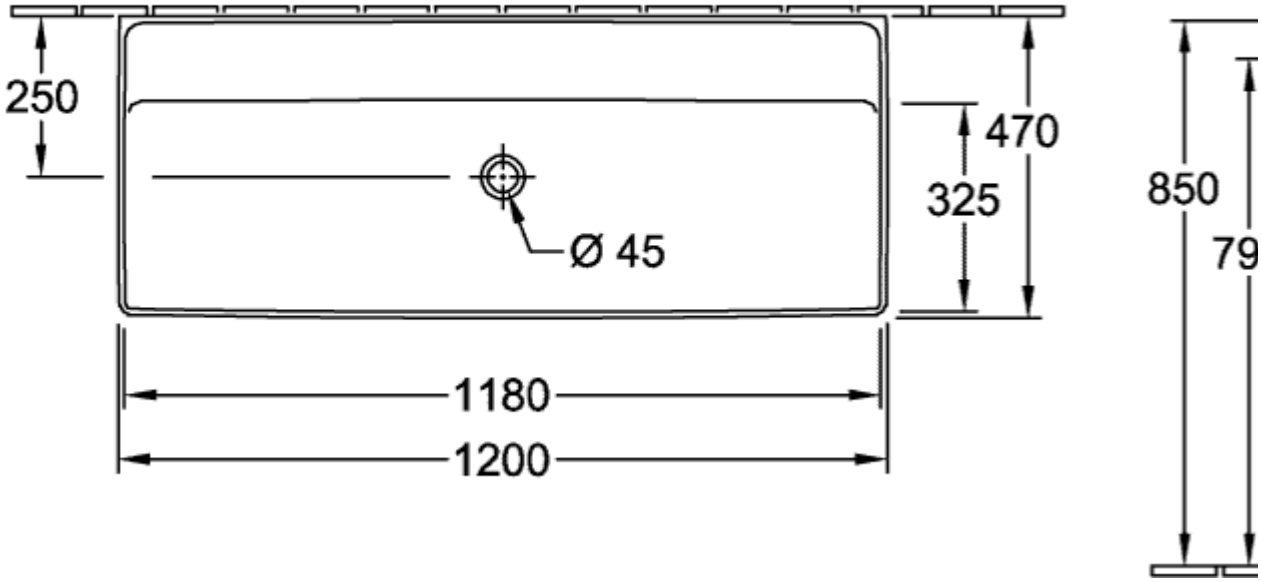
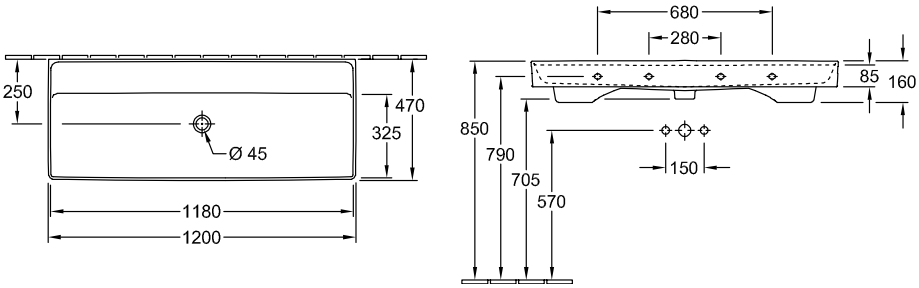
4A33C301