O.NOVO WASHBASIN OVAL

PRODUCT INFORMATION

Article title	Villeroy & Boch O.novo Washbasin, 650 x 510 x 200 mm, White Alpin, with overflow
Article number	51606501
Assembly / Assembly type	wall-mounted
Scope of delivery	1 x washbasin
Depth in mm	510
Width in mm	650
Height in mm	200
Interior depth	135
Collection	O.novo
Suitable for	3-hole mixer
Material	Sanitary ceramics
surface	glossy
Colour name	White Alpin
With overflow	Yes
Shape	Oval
Colour designation	White Alpin
Antibacterial surface (with AntiBac)	No
Easy surface cleaning (CeramicPlus)	No
Number of tap holes punched through	1
Number of tap holes pre-drilled	2
Number of bowls	1

TECHNICAL DRAWINGS

51606501

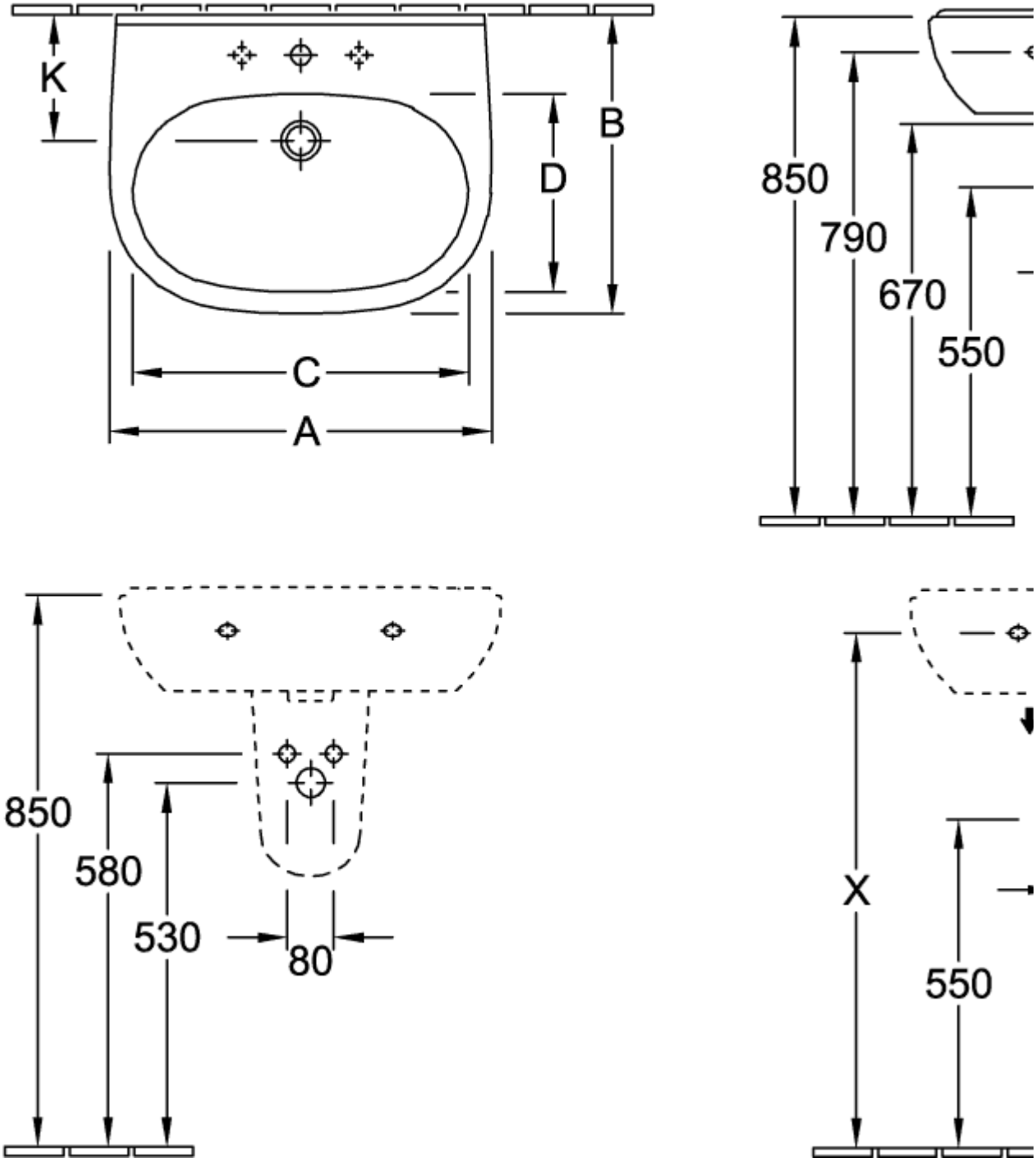

51606501

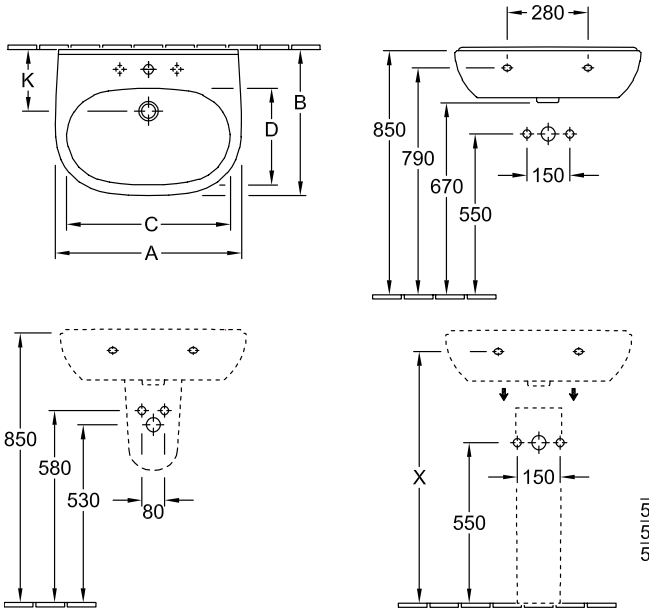

	A	B	C	D
5160 55	550	450	475	280
5160 60	600	490	525	315
5160 65	650	510	565	330

51606501

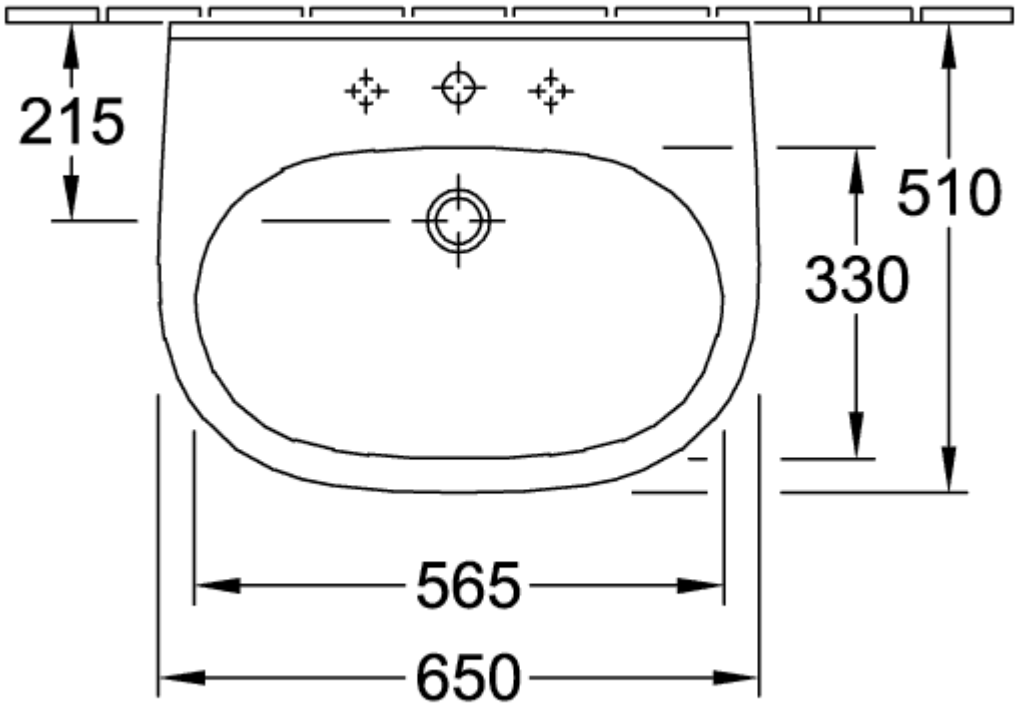

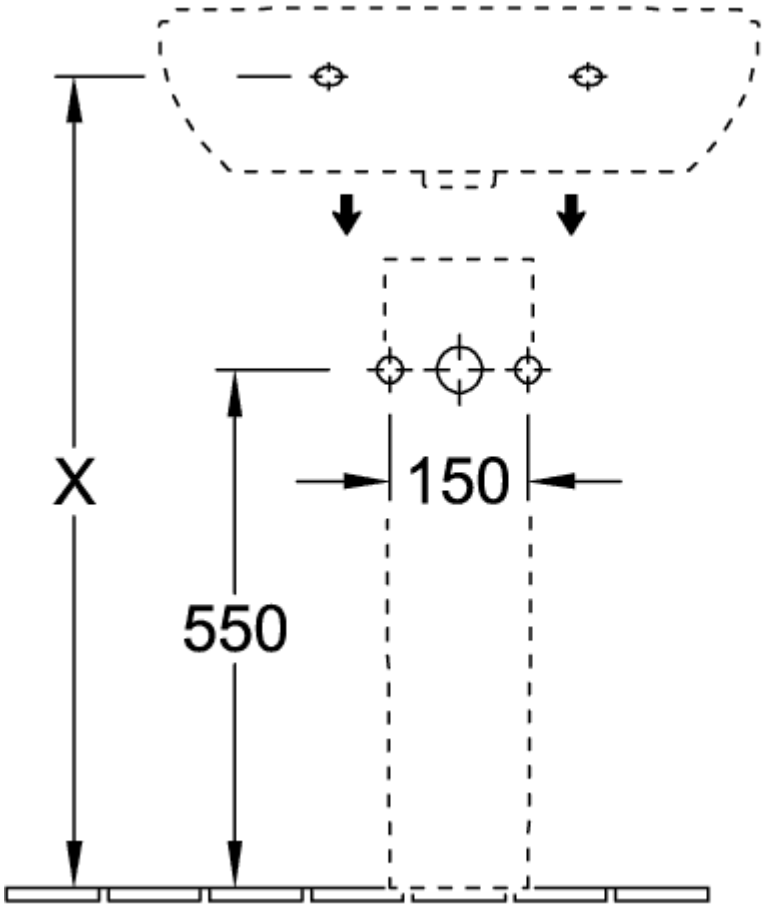

5265 00

51606501

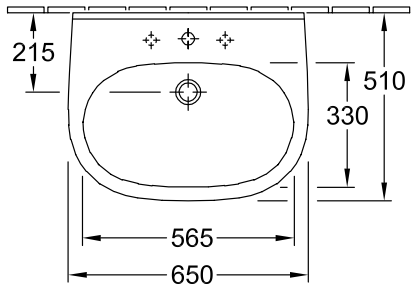

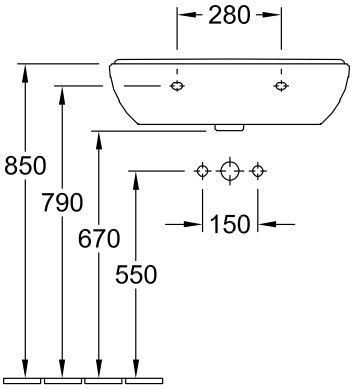

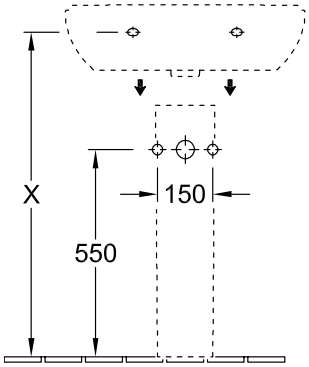

5265 00

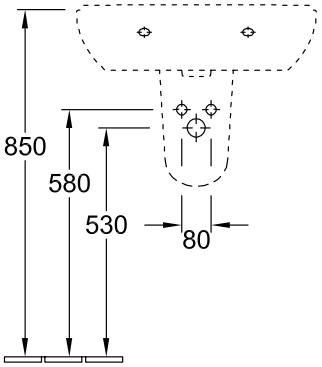

5266 00