O.NOVO TRAP COVER

PRODUCT INFORMATION

Article title	Villeroy & Boch O.novo Trap cover, 225 x 320 x 290 mm, White Alpin
Article number	52660001
Scope of delivery	1 x trap cover , 1 x fastening set
Depth in mm	320
Width in mm	225
Height in mm	290
Collection	O.novo
Material	Sanitary ceramics
Colour name	White Alpin
Colour designation	White Alpin

TECHNICAL DRAWINGS

52660001

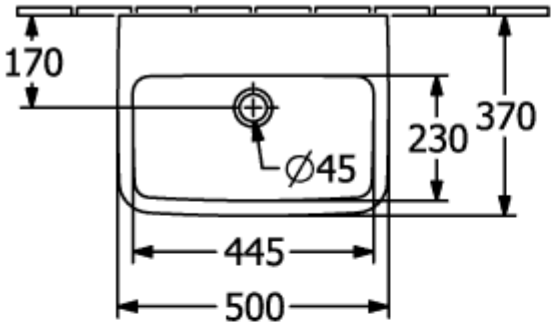

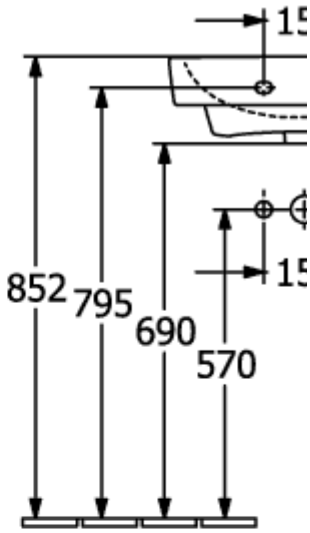

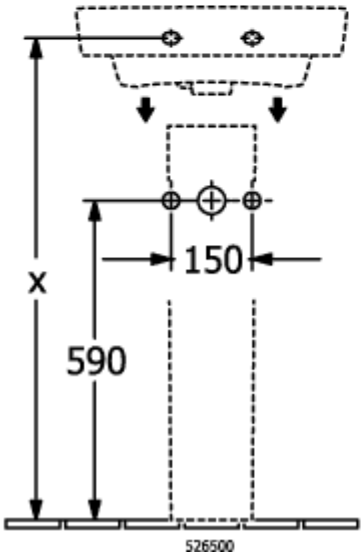

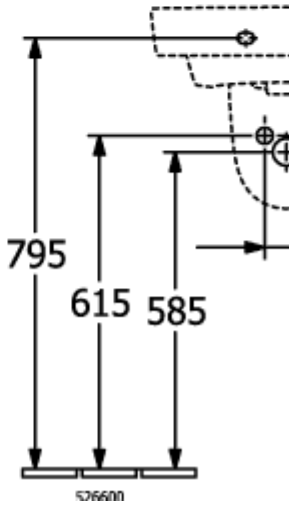

52660001

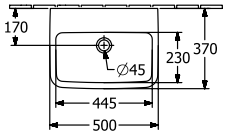

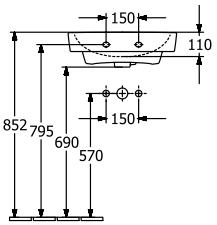

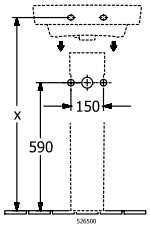

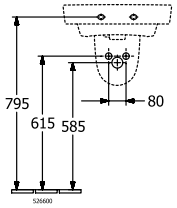

52660001

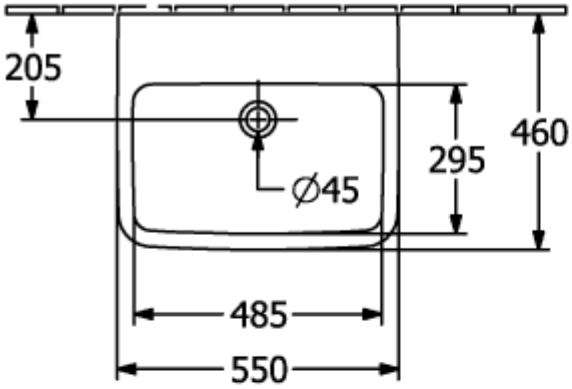

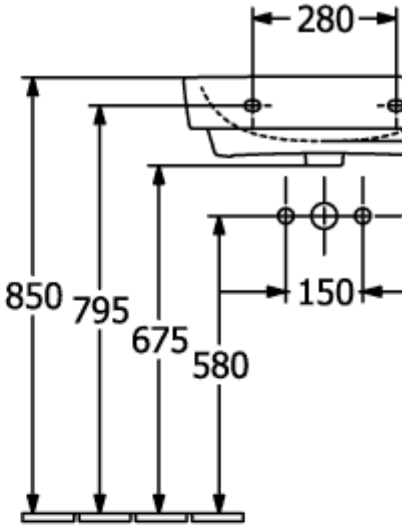

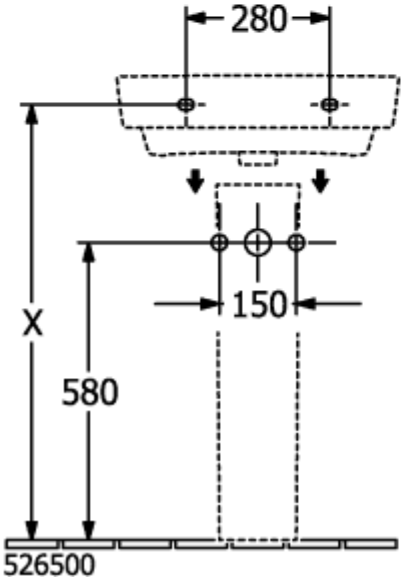

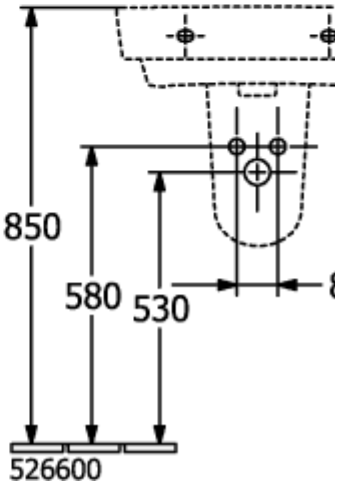

52660001

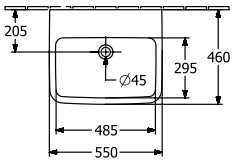

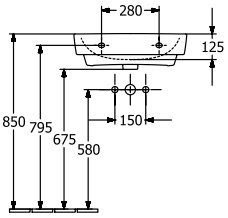

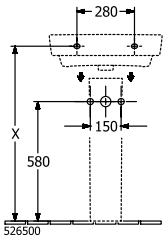

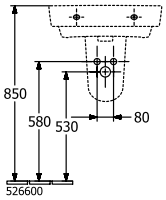

52660001

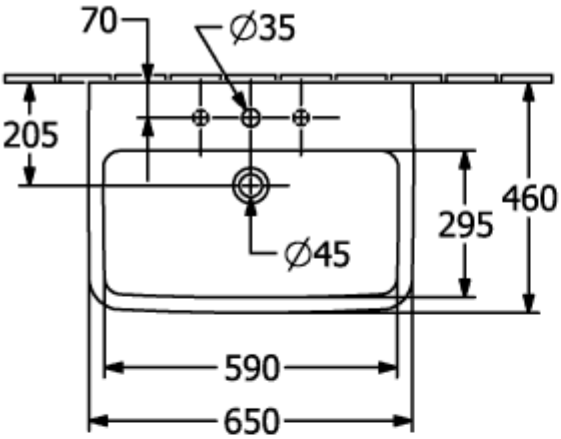

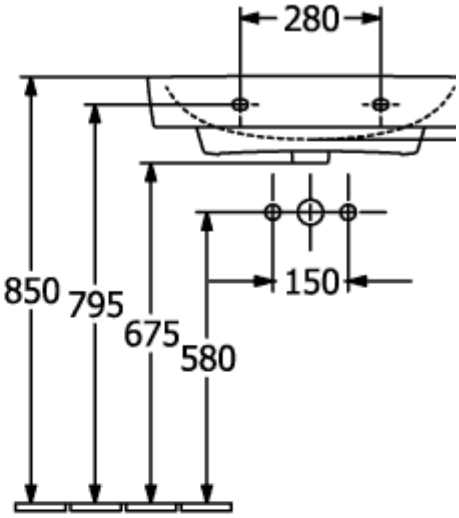

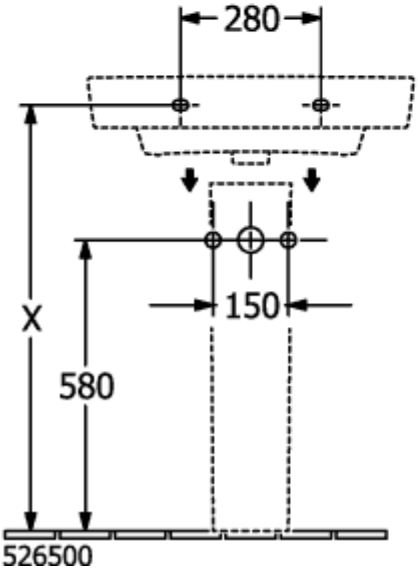

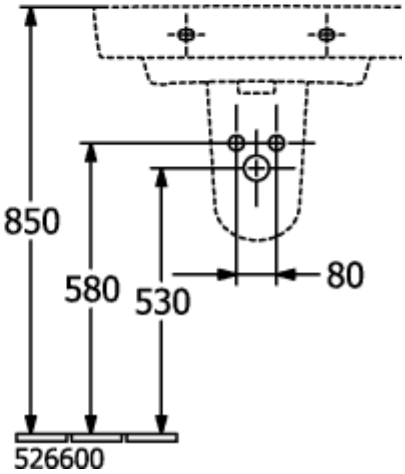

52660001

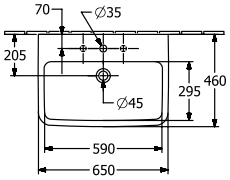
70
∅35
205
460
295
∅45
590
650

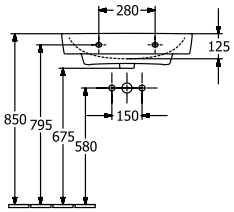
280
125
850
795
675
580
150

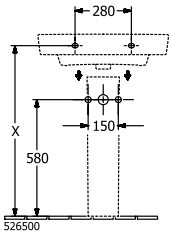
280
X
150
580
526500

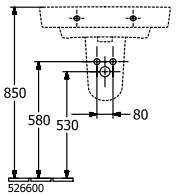
850
580
530
80
526600

52660001

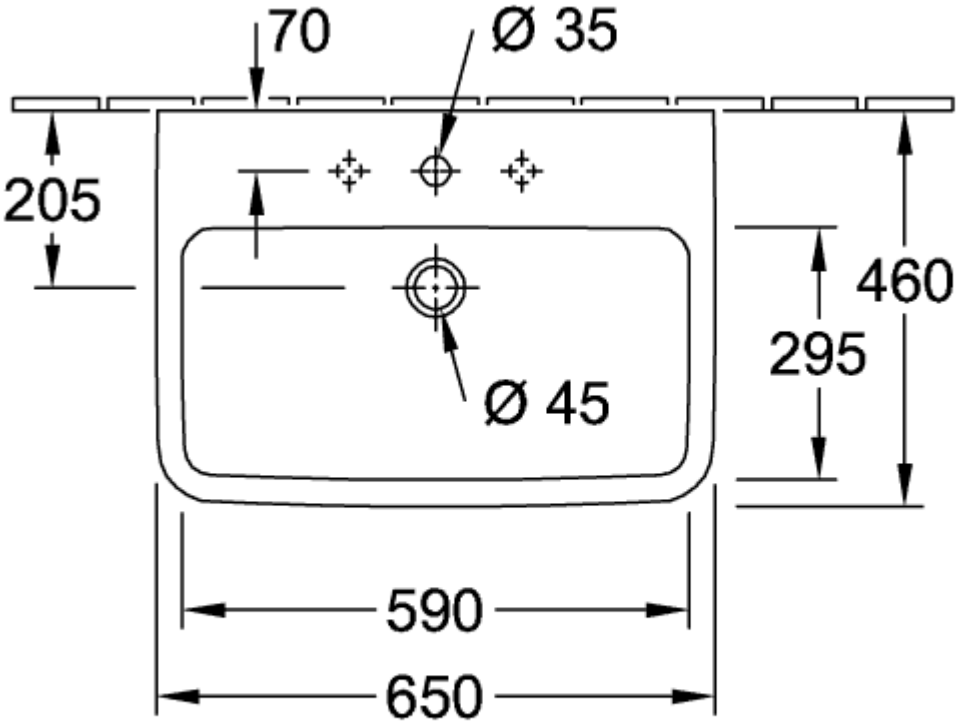
70
Ø 35
205
460
295
Ø 45
590
650

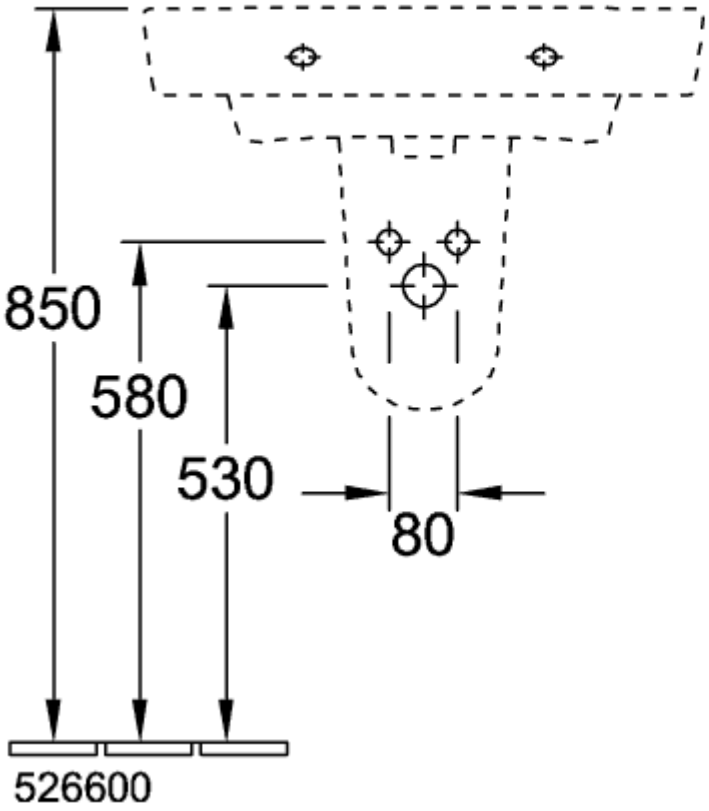
850
580
530
80
526600

52660001

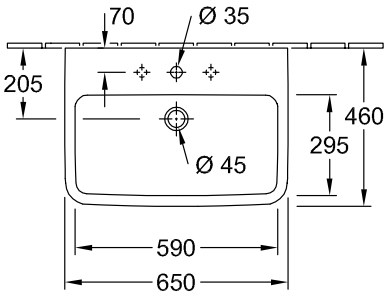
70
Ø 35
205
460
295
Ø 45
590
650

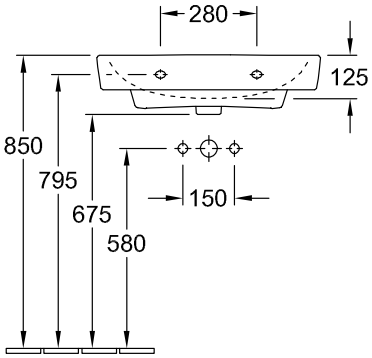
280
125
850
795
675
580
150

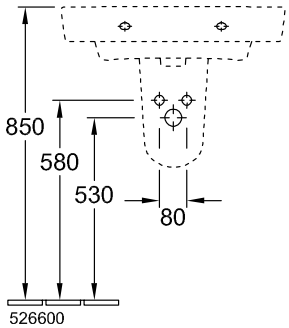
850
580
530
80
526600

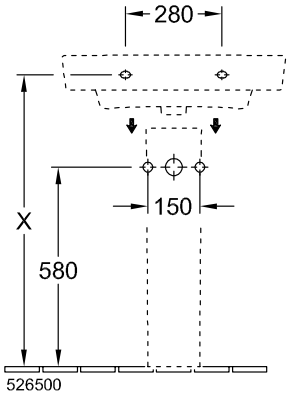
280
150
X
580
526500

52660001

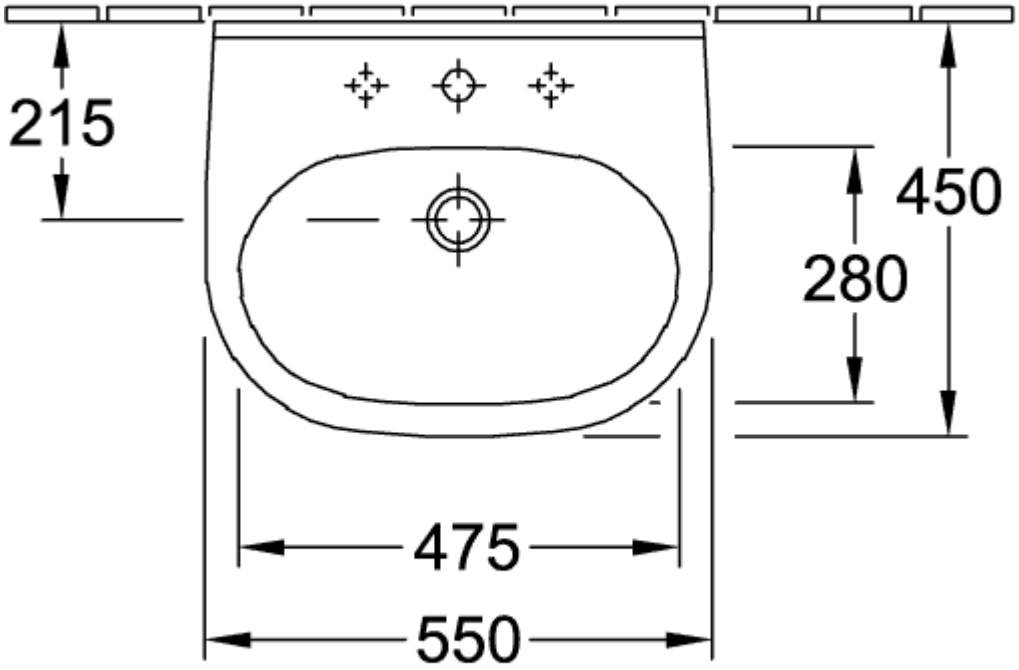

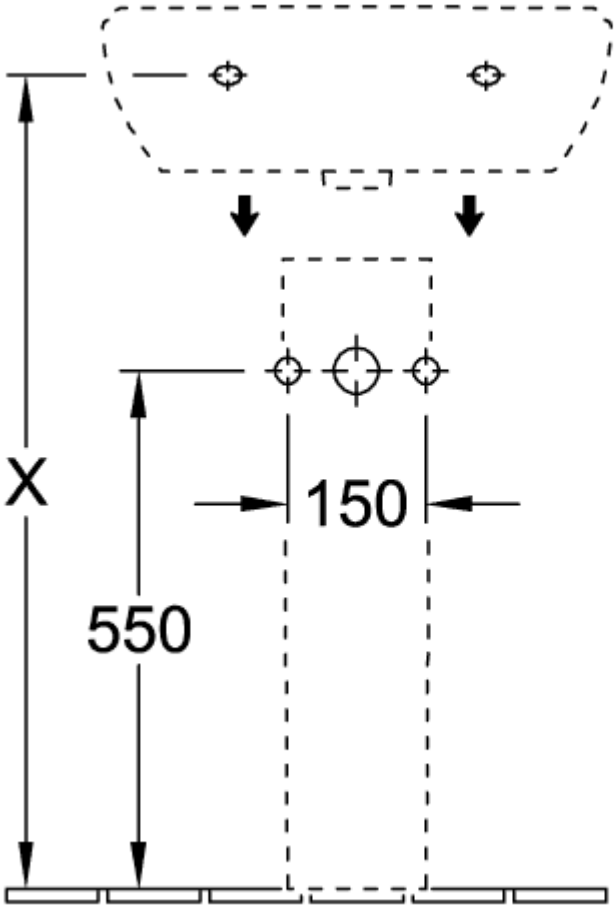

5265 00

52660001

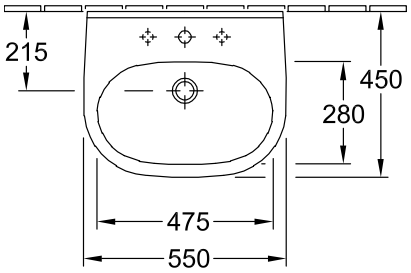

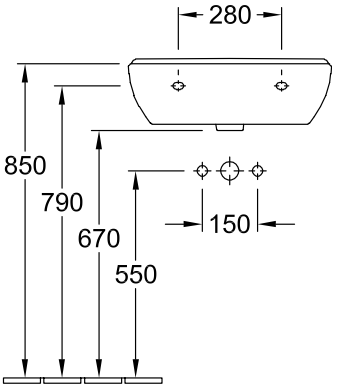

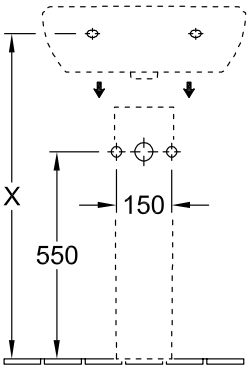

5265 00

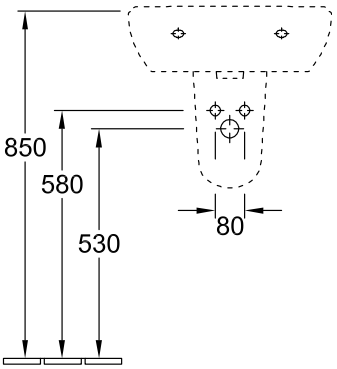

5266 00

52660001

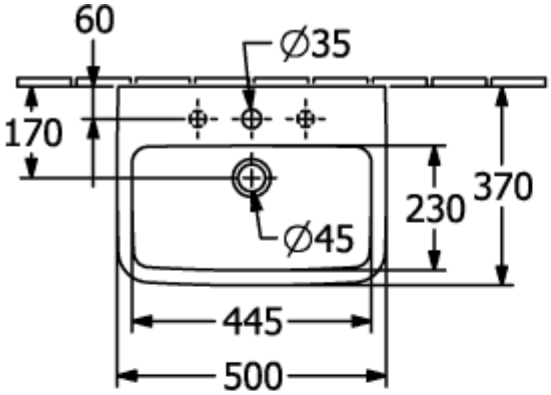

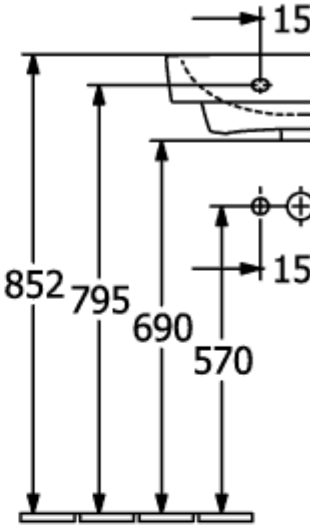

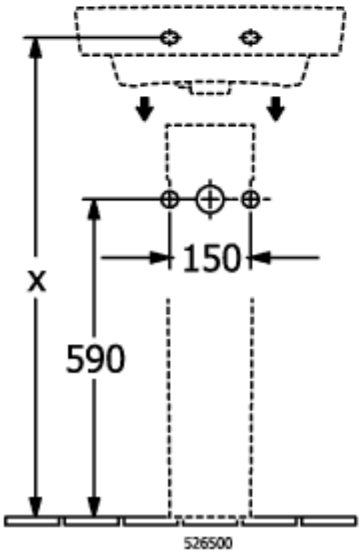

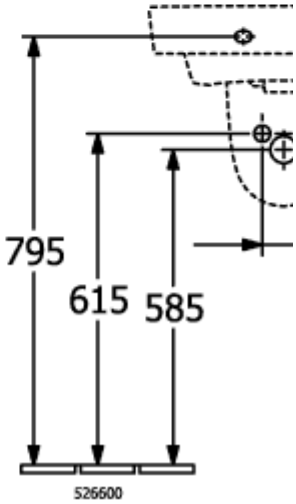

52660001

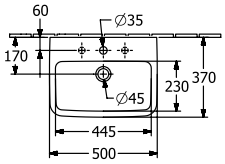

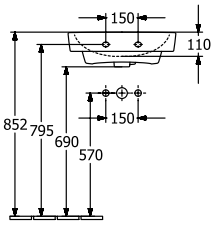

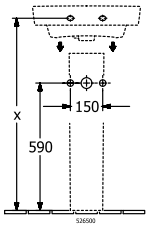

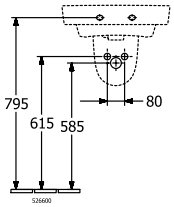

52660001

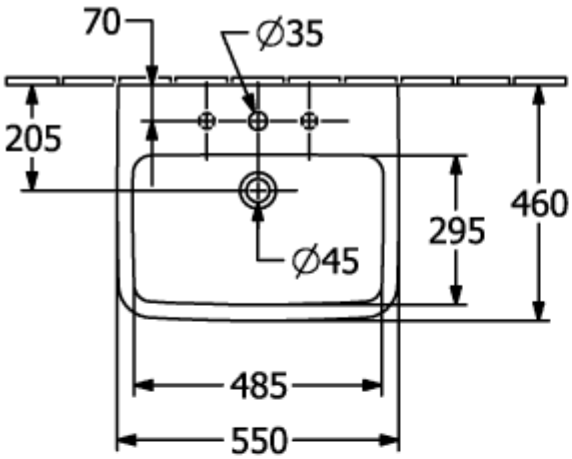

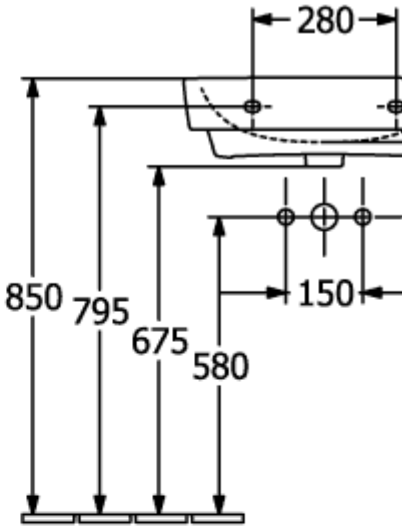

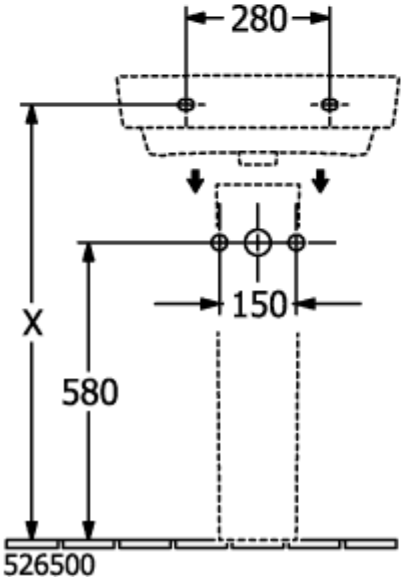

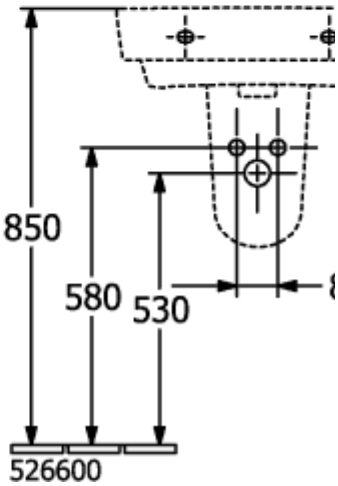

52660001

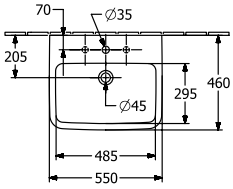

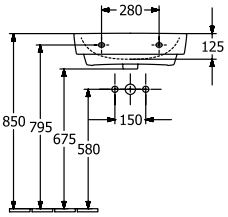

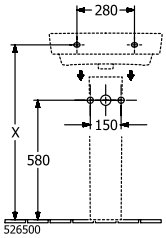

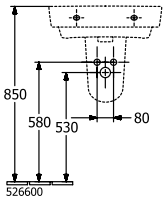

52660001

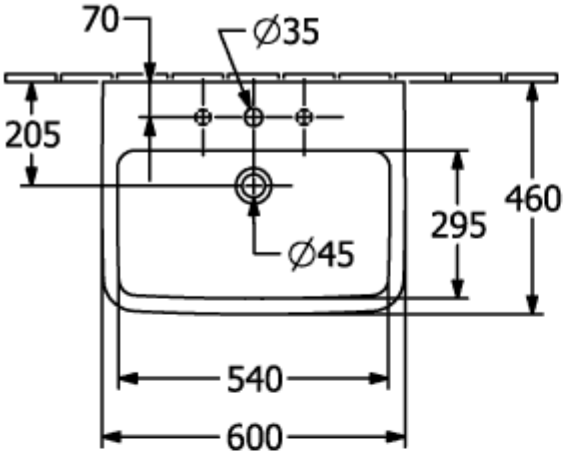

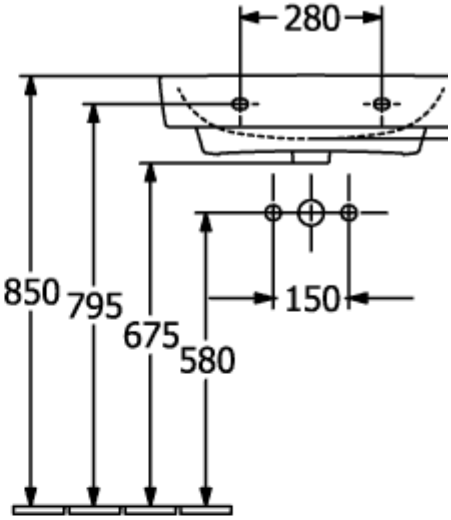

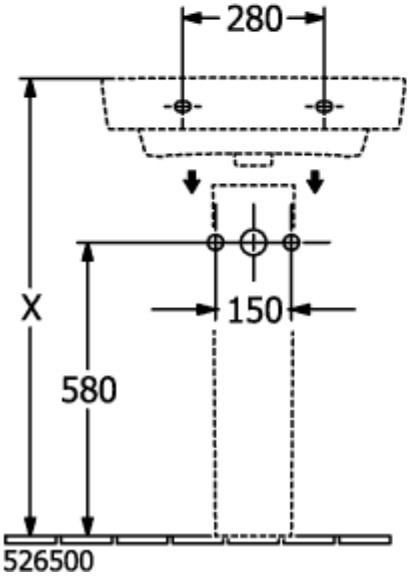

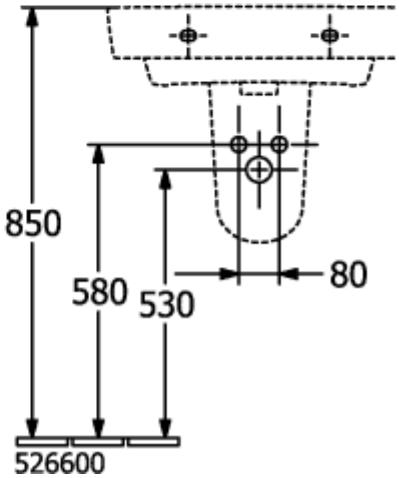

52660001

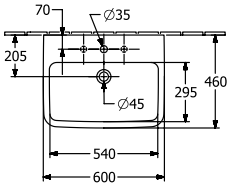

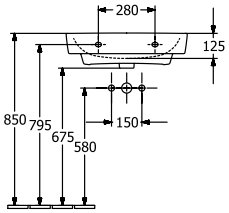

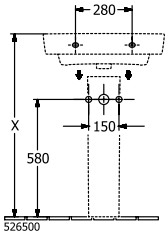

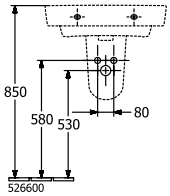

52660001

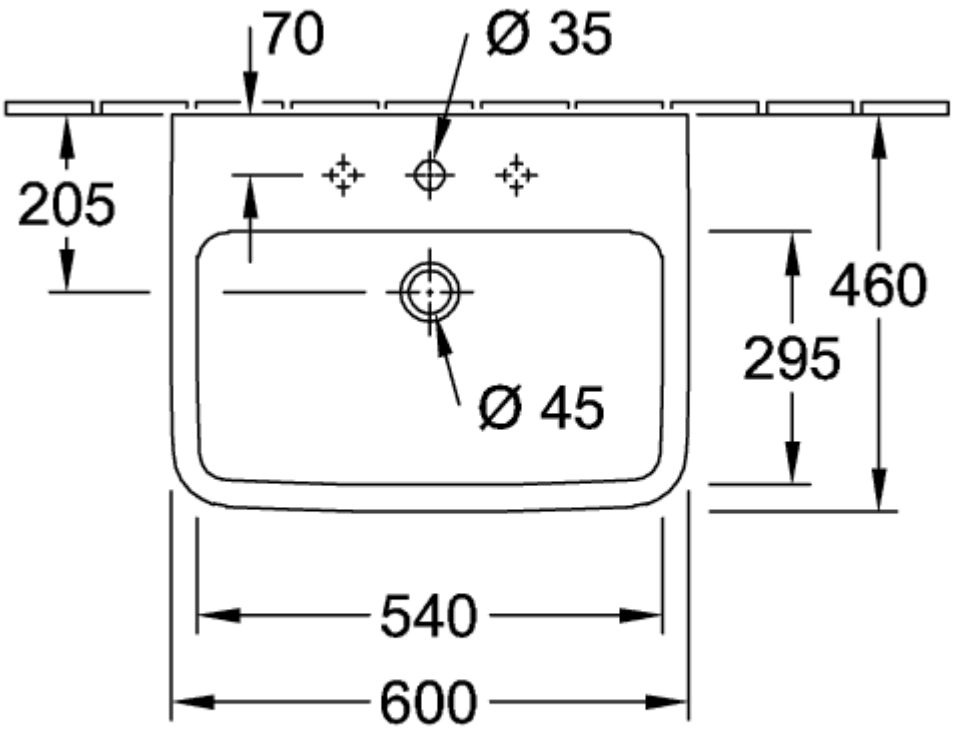
70
Ø 35
205
460
295
Ø 45
540
600

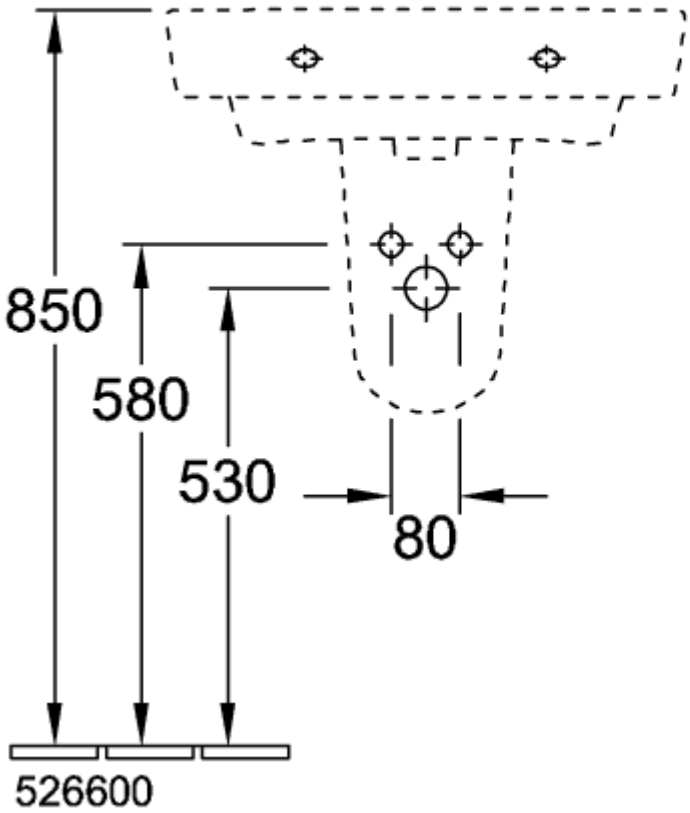
850
580
530
80
526600

52660001

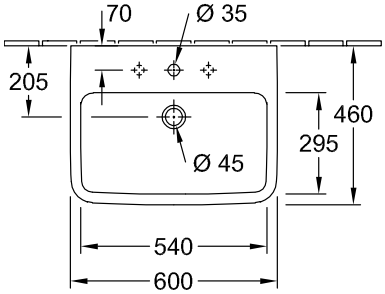

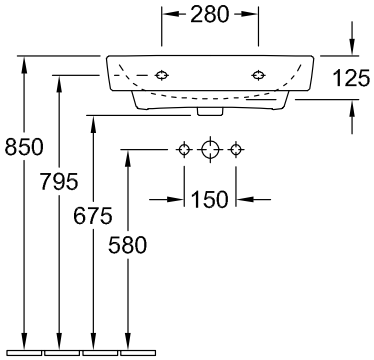

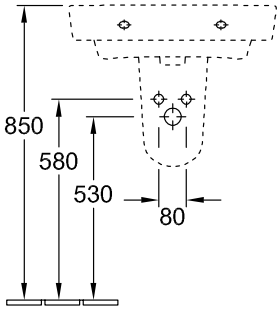

526600

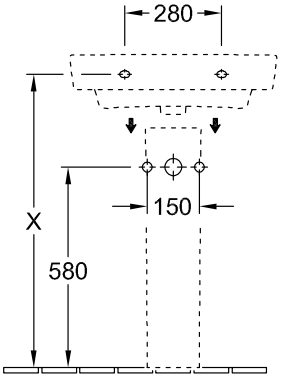

526500

52660001

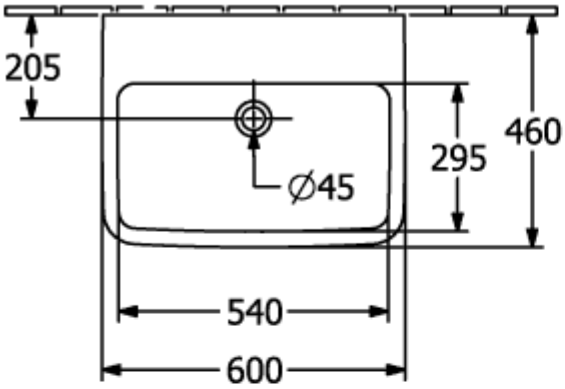

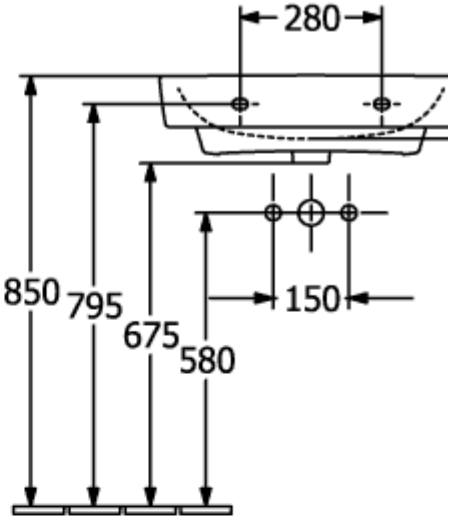

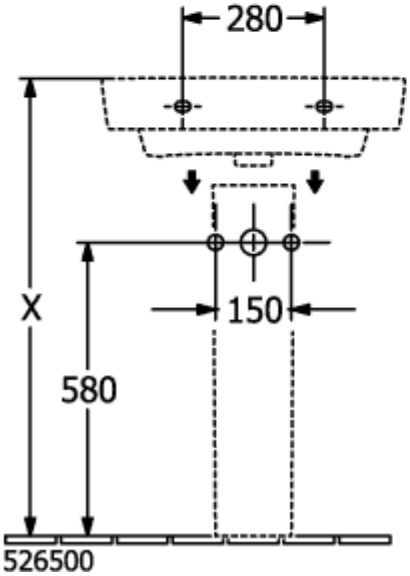

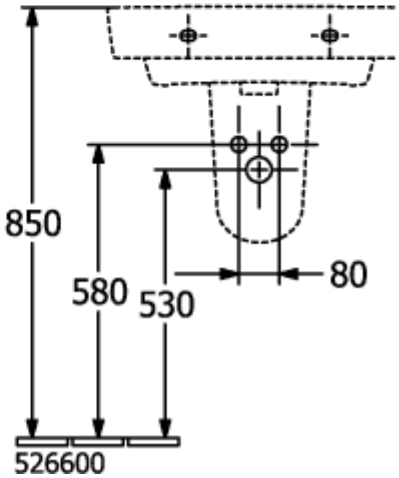

52660001

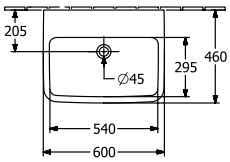

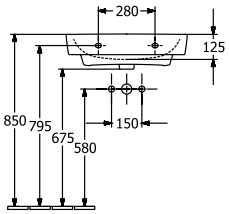

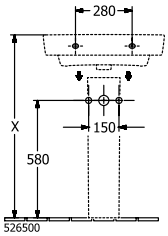

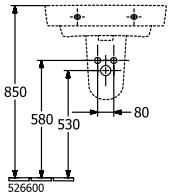

52660001

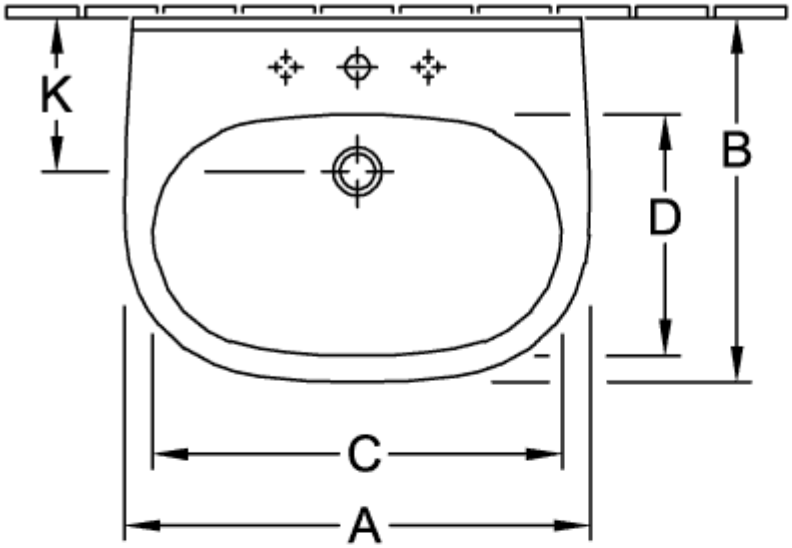

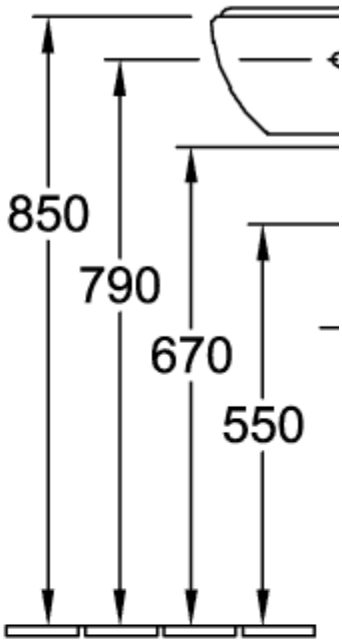

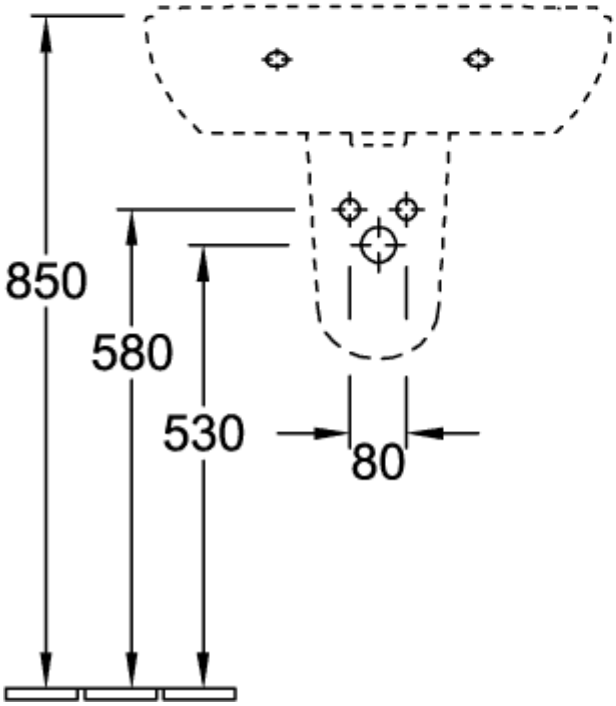

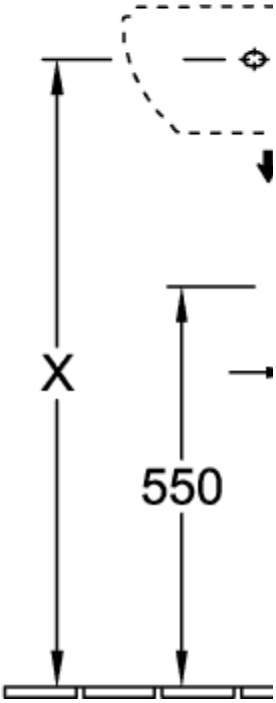

52660001

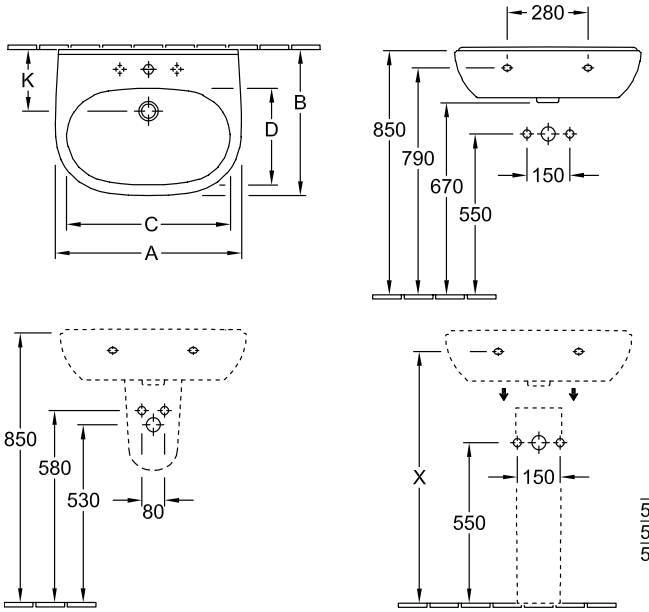

	A	B	C	D
5160 55	550	450	475	280
5160 60	600	490	525	315
5160 65	650	510	565	330

52660001

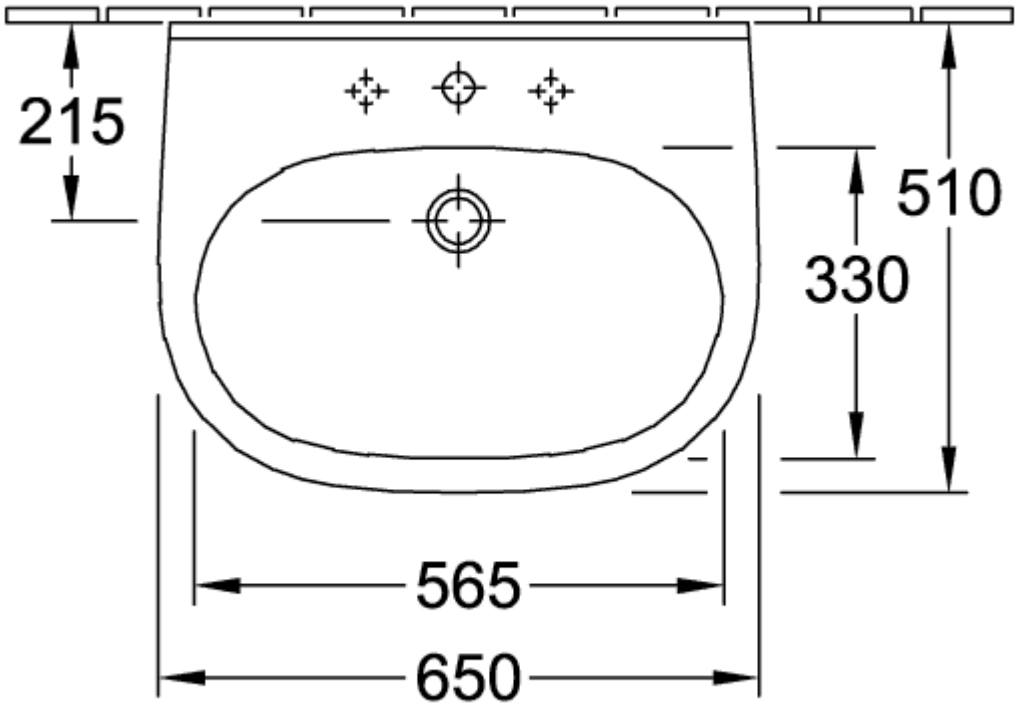

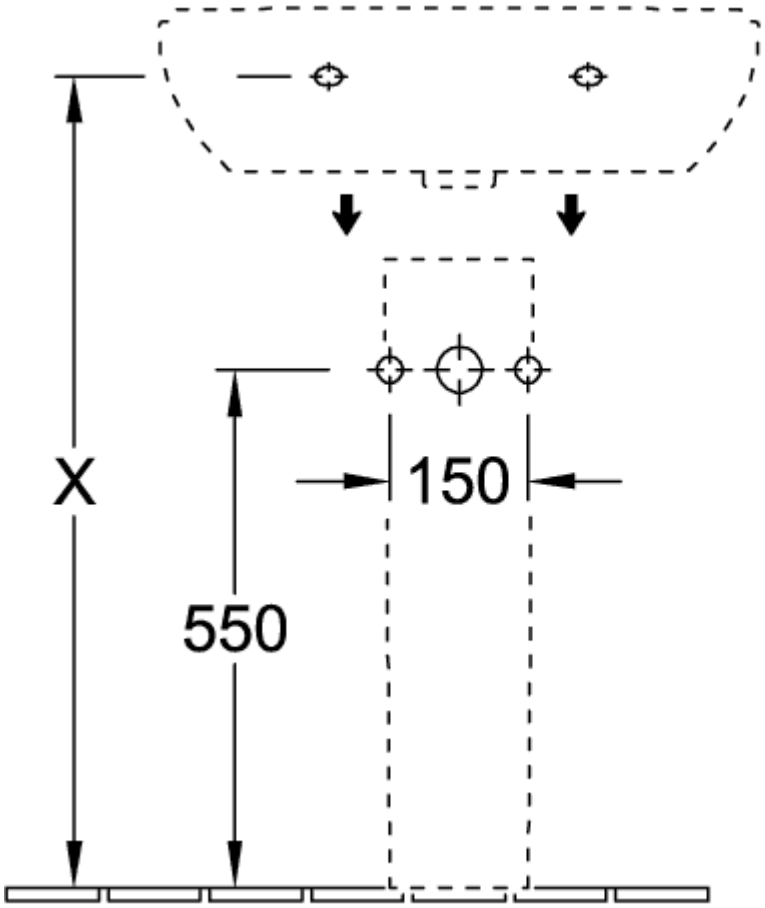

5265 00

52660001

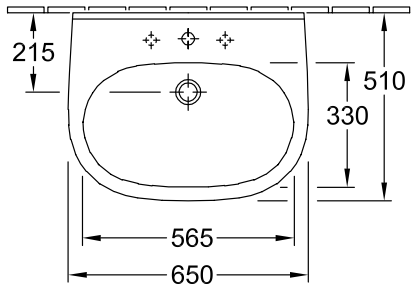

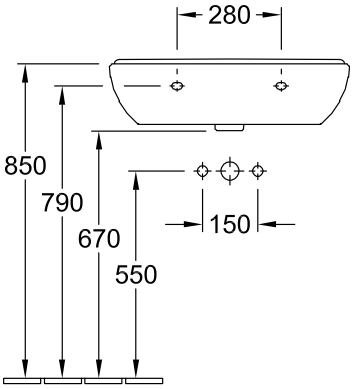

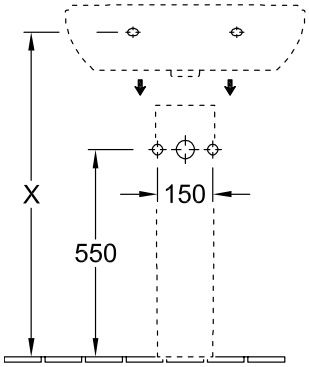

5265 00

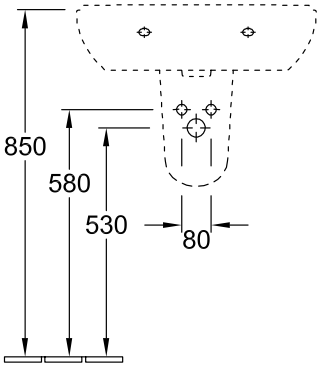

5266 00

52660001

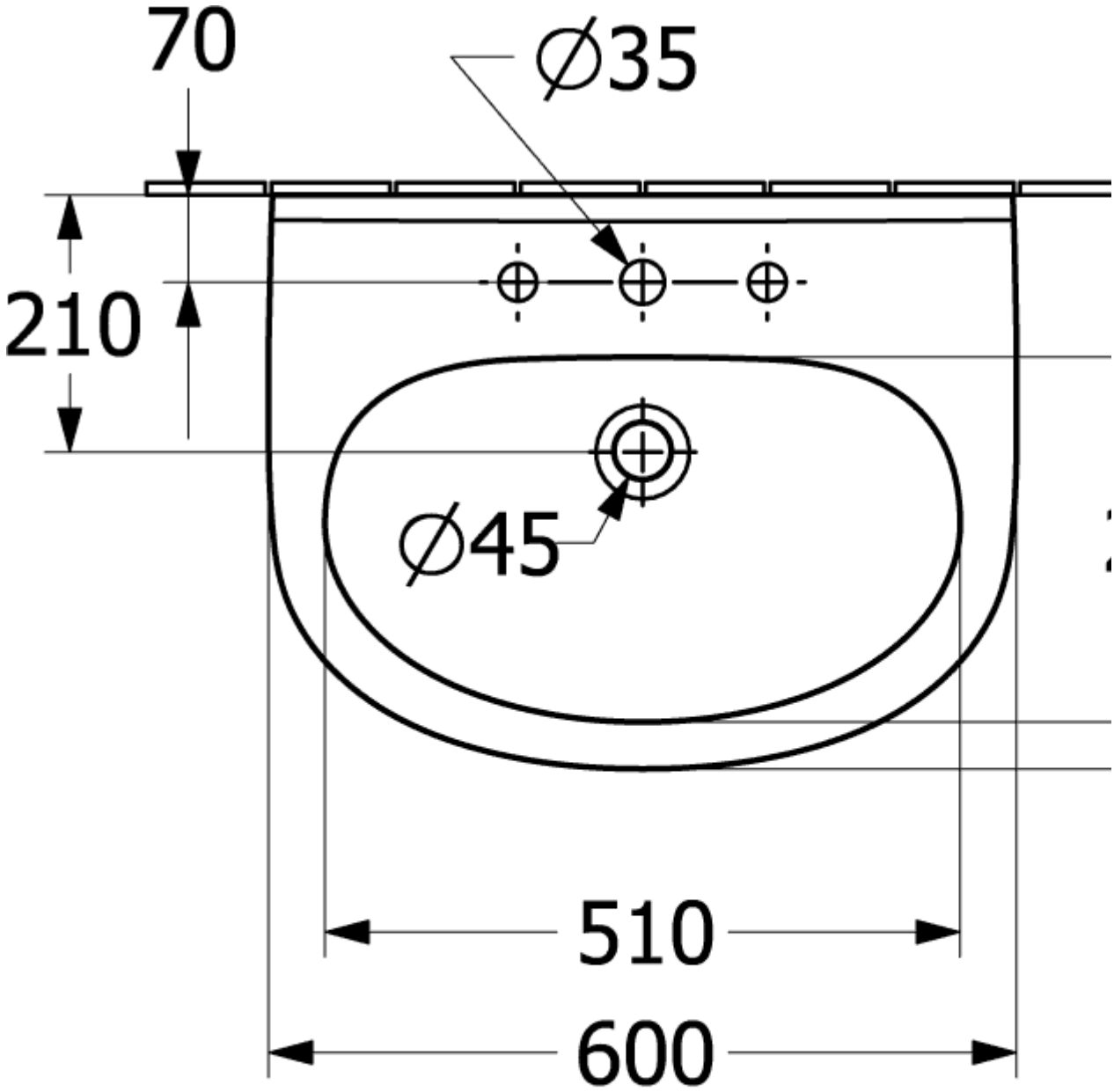
70
∅35
210
∅45
510
600

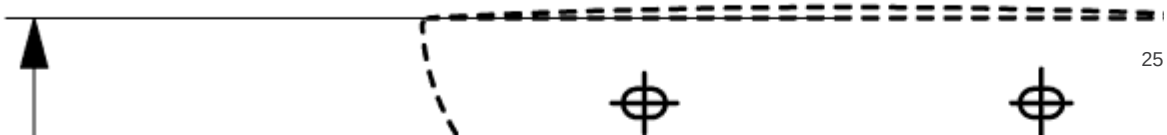

52660001

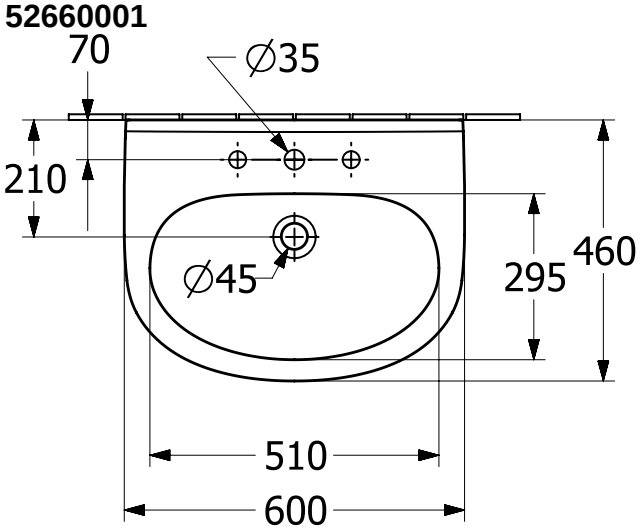
70
∅35
210
460
295
∅45
510
600

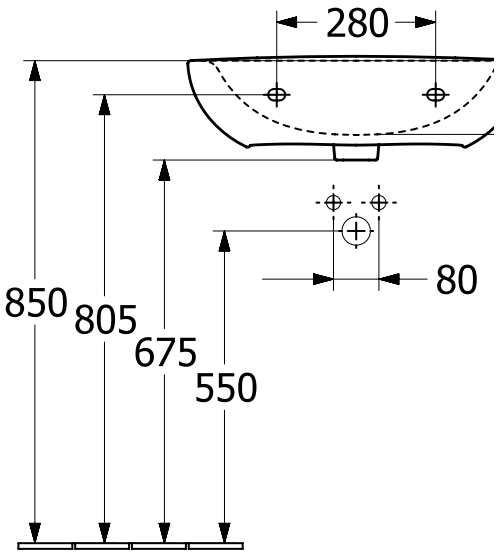
280
850
805
675
550
80

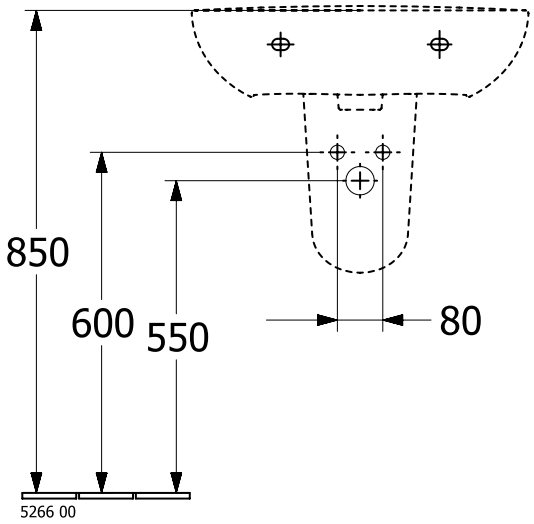
850
600
550
80
5266 00

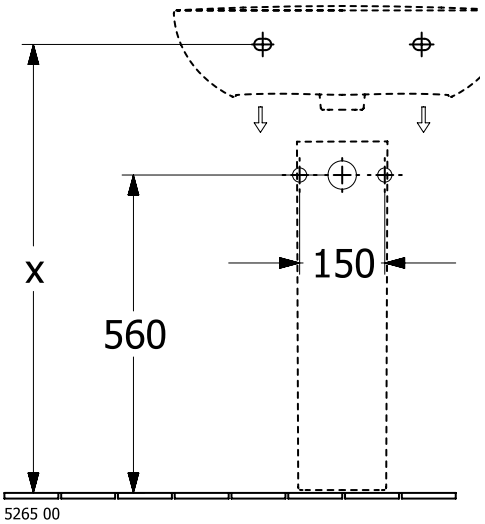
x
560
150
5265 00

52660001

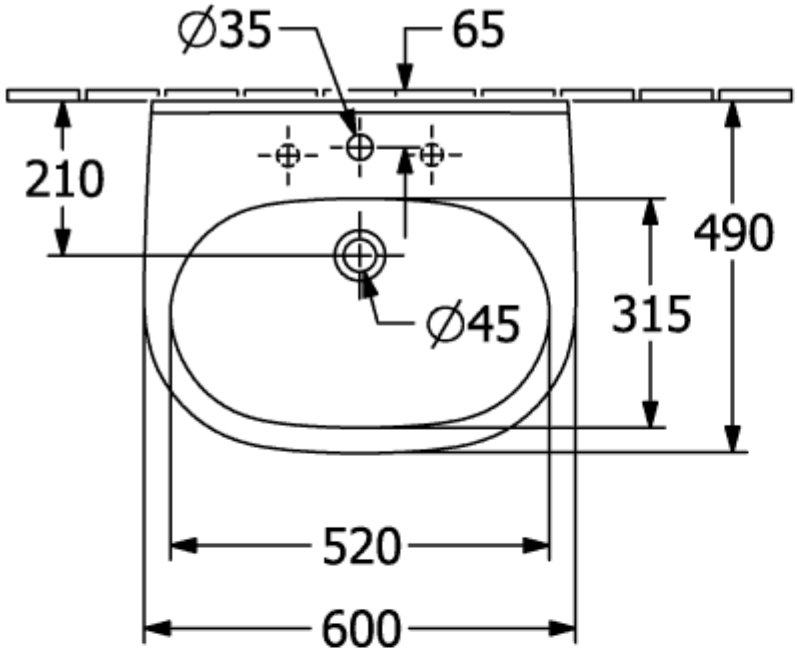

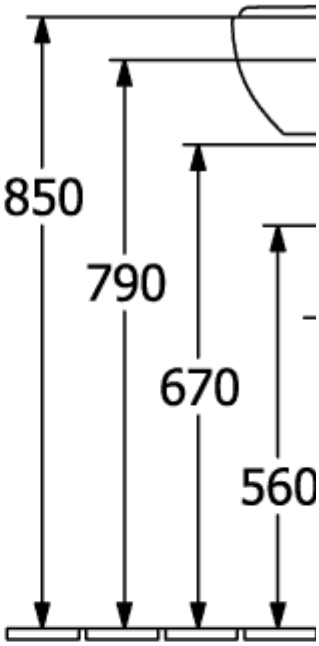

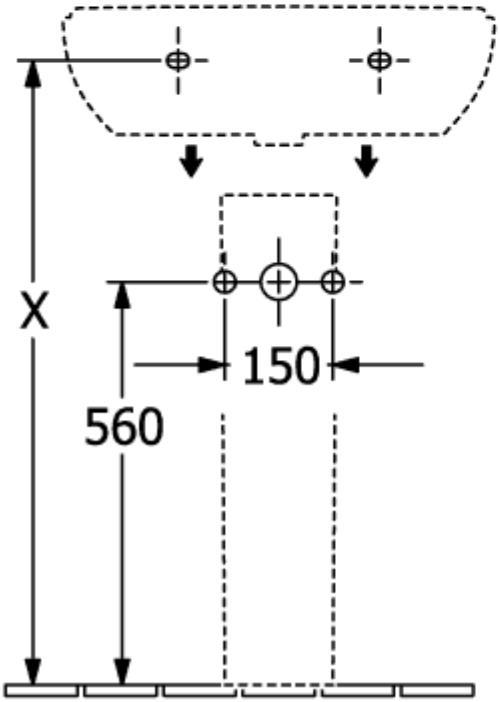

5265 00

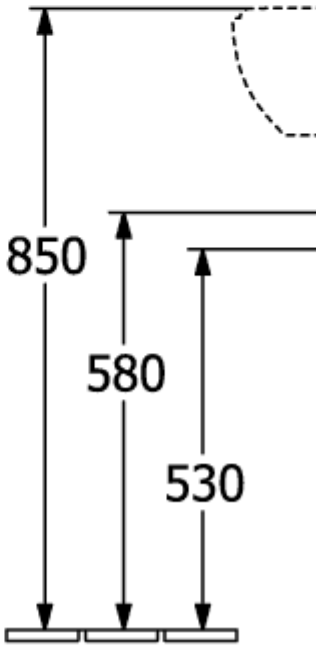

5266 00

52660001

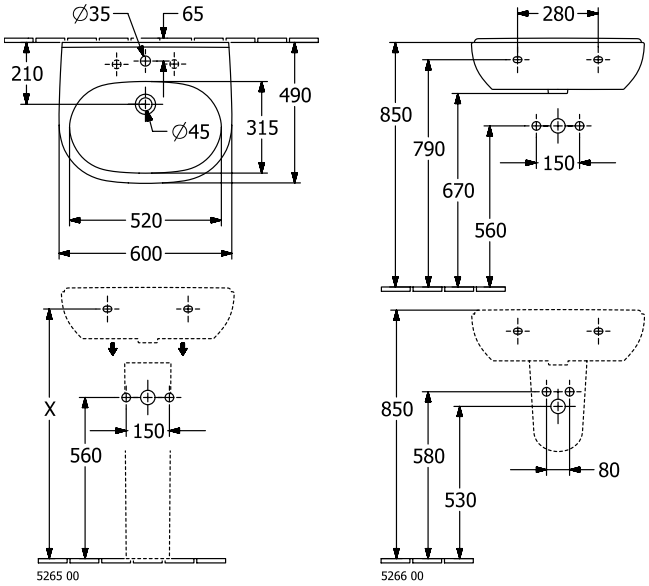

52660001

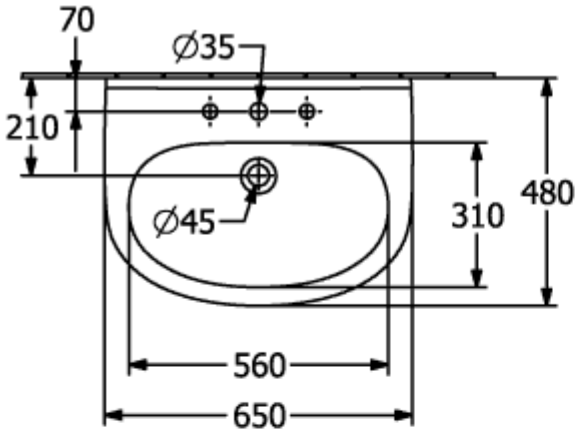

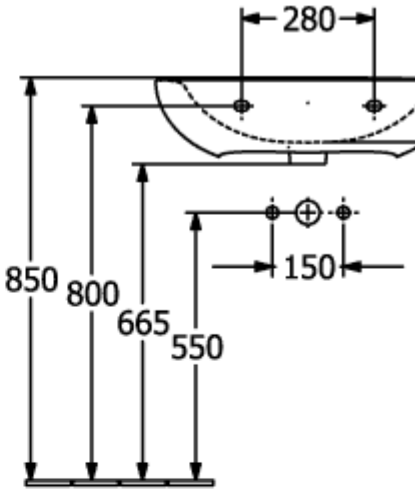

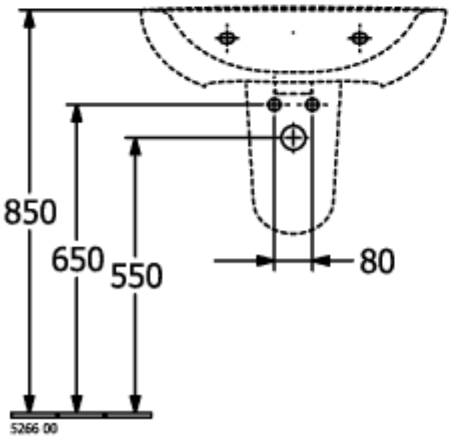

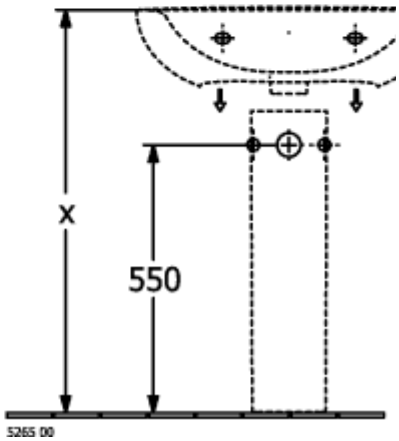

52660001

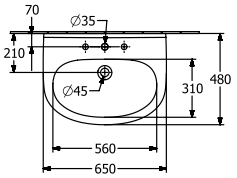
70
∅35
210
∅45
310
480
560
650

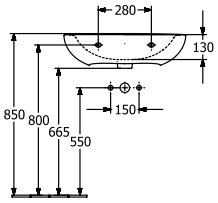
280
130
850
800
665
550
150

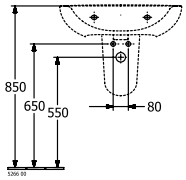
850
650
550
80

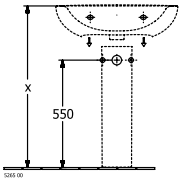
x
550

52660001

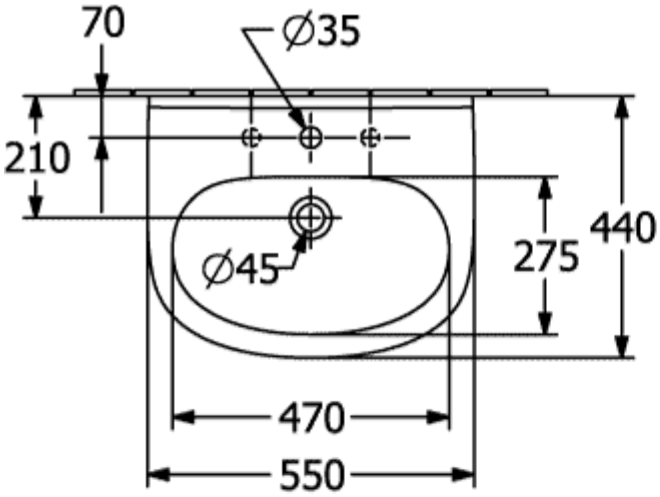
70
Ø35
210
440
275
Ø45
470
550

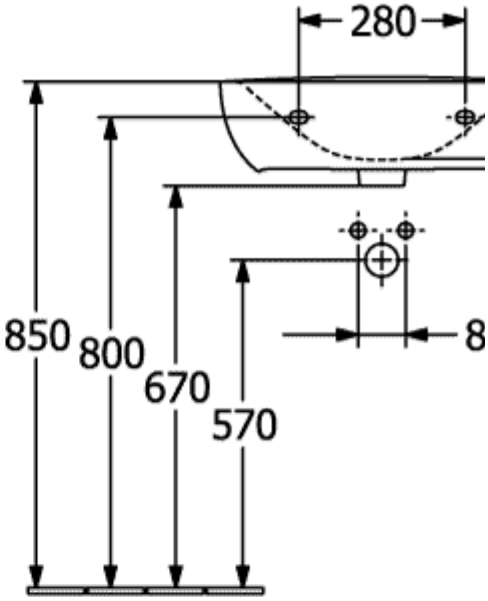
280
850
800
670
570
8

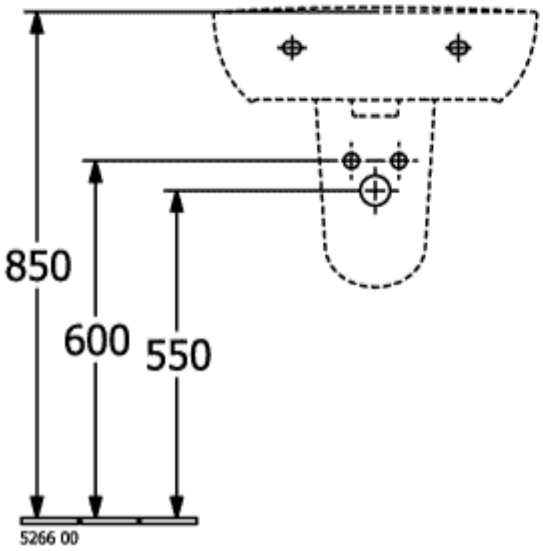
850
600
550
5266 00

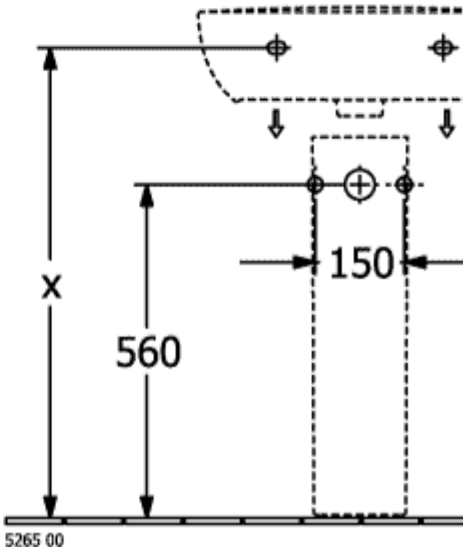
x
560
150
5265 00

52660001

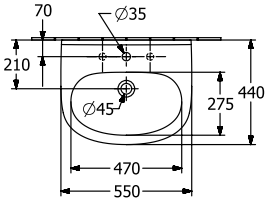
70
∅35
210
440
275
∅45
470
550

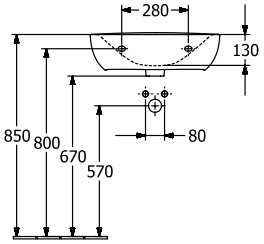
280
130
850
800
670
570
80

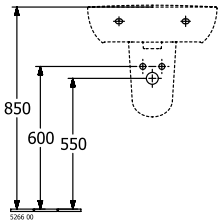
850
600
550
5266 00

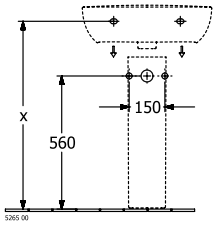
x
560
150
5265 00