AVENTO BIDET OVAL

PRODUCT INFORMATION

Article title	Villeroy & Boch Avento Bidet, wall-mounted, 370 x 530 mm, White Alpin
Article number	54050001
Assembly / Assembly type	wall-mounted
Scope of delivery	1 x bidet , 1 x fastening set
Depth in mm	530
Width in mm	370
Height in mm	215
Collection	Avento
Suitable for	1-hole mixer
Wall-mounted - floor-standing	wall-mounted
Material	Sanitary ceramics
surface	glossy
Colour name	White Alpin
Shape	Oval
Colour designation	White Alpin
Antibacterial surface (with AntiBac)	No
Easy surface cleaning (CeramicPlus)	No

TECHNICAL DRAWINGS

54050001

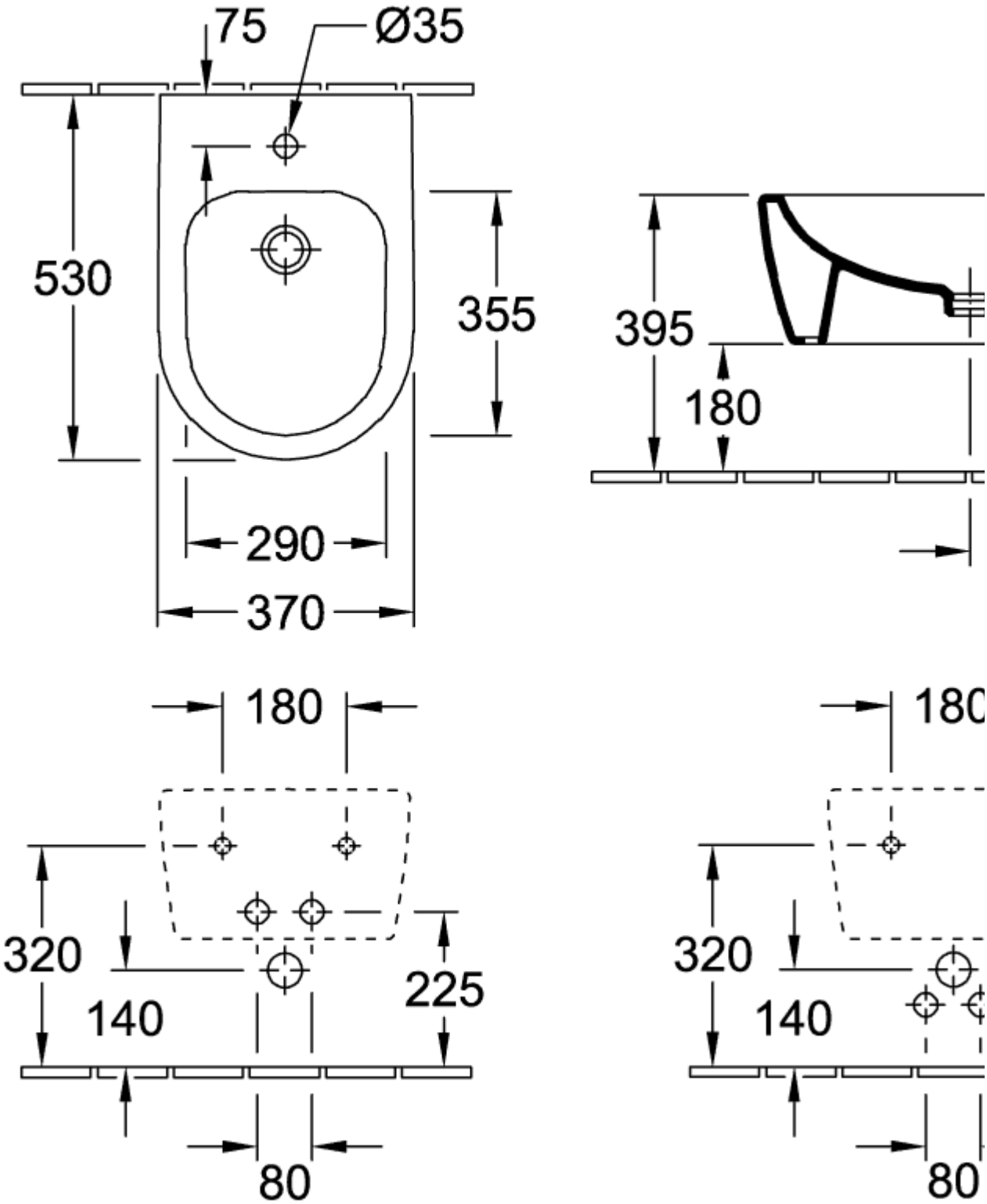

54050001

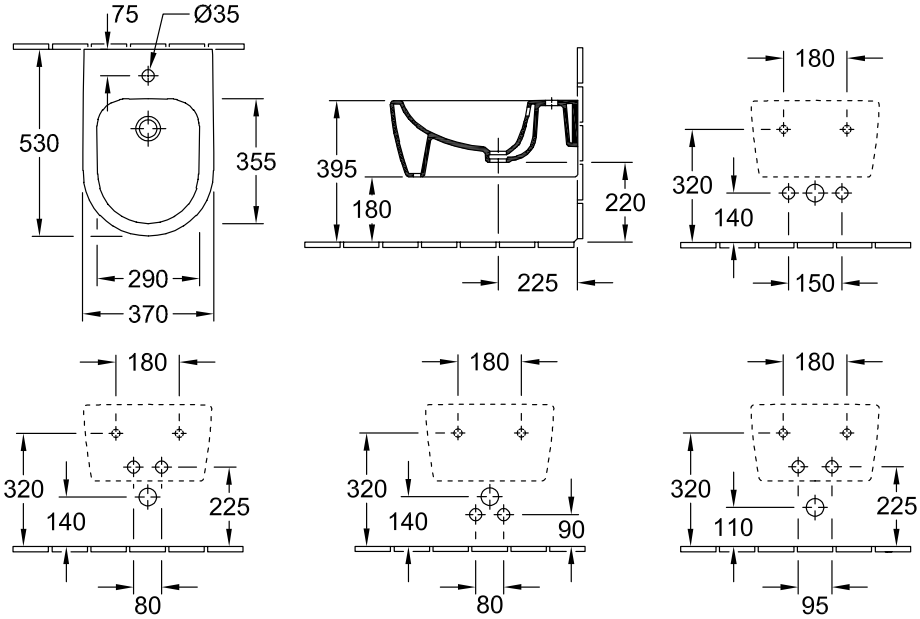
75
Ø35
530
355
290
370
395
180
220
225
180
320
140
150
180
320
140
225
80
180
320
140
90
80
180
320
110
225
95