# SUBWAY 2.0 WASHDOWN TOILET, RIMLESS OVAL

## PRODUCT INFORMATION

| | |
|---|---|
| Article title | Villeroy & Boch Subway 2.0 Washdown toilet, rimless, floor-standing, White Alpin |
| Article number | 5602R001 |
| Assembly / Assembly type | floor-standing |
| Assembly instructions | not suitable for installation with flush valves |
| Scope of delivery | 1 x washdown toilet, rimless , 1 x fastening set |
| Depth in mm | 560 |
| Width in mm | 370 |
| Height in mm | 400 |
| Collection | Subway 2.0 |
| Suitable for | Concealed cistern |
| Innovative flushing technology (with TwistFlush) | No |
| Flush volume l | 3 / 4,5 l |
| Wall-mounted - floor-standing | floor-standing |
| Material | Sanitary ceramics |
| surface | glossy |
| Colour name | White Alpin |
| Shape | Oval |
| Colour designation | White Alpin |
| Antibacterial surface (with AntiBac) | No |
| Easy surface cleaning (CeramicPlus) | No |
| Rimless (mit DirectFlush) | Yes |
| Flush type | Washdown toilet |
| Integrated freshness solution (with ViFresh) | No |
| Outlet / outlet | horizontal outlet |

## TECHNICAL DRAWINGS

**5602R001**

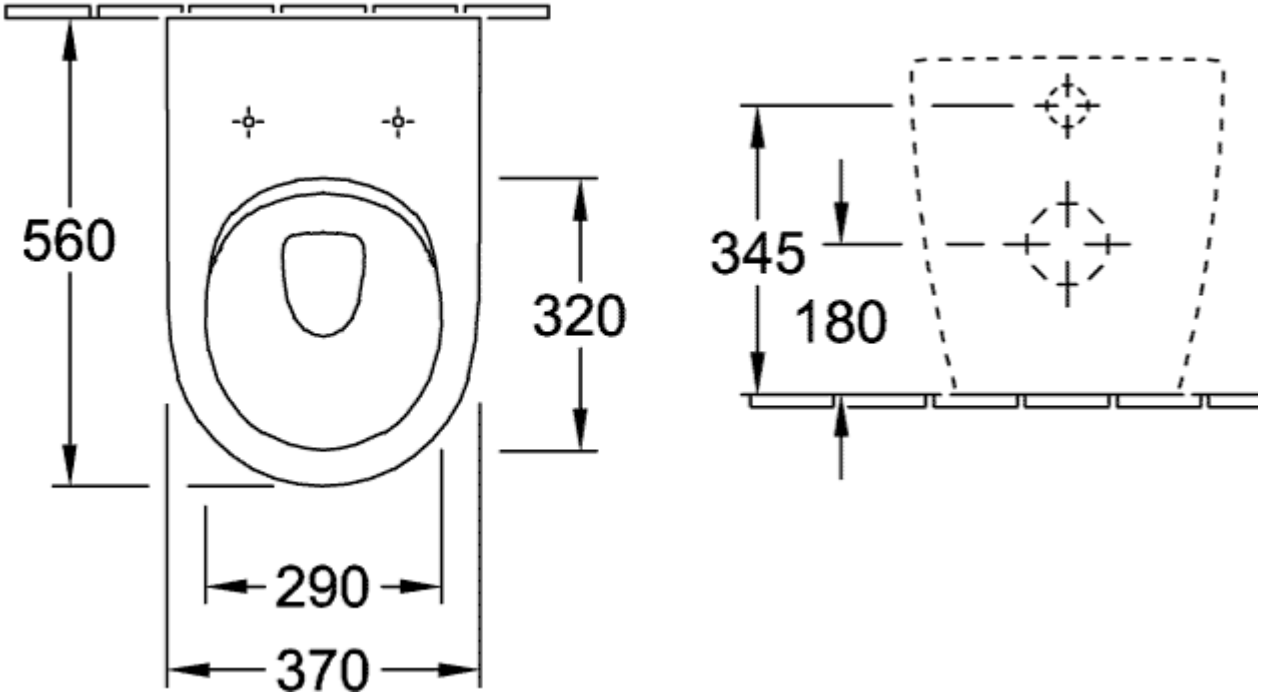

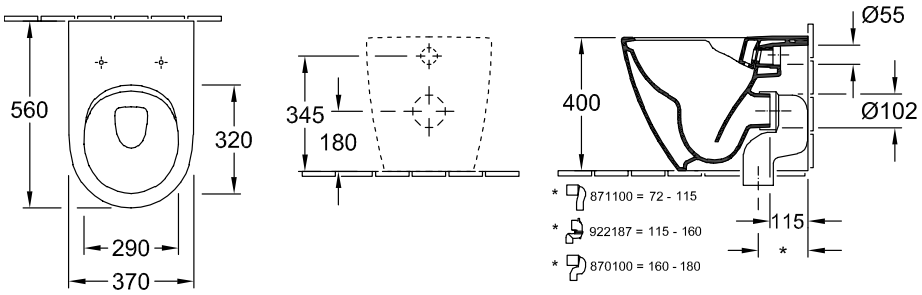
**5602R001**