ARCHITECTURA COMBI-PACK OVAL

PRODUCT INFORMATION

Article title	Villeroy & Boch Architectura Combi-Pack, wall-mounted, White Alpin
Article number	5684H101
Assembly / Assembly type	wall-mounted
Scope of delivery	1 x washdown toilet , 1 x toilet seat and cover
Depth in mm	530
Width in mm	370
Height in mm	330
Collection	Architectura
Suitable for	Concealed cistern
Innovative flushing technology (with TwistFlush)	No
Flush volume l	3 / 4,5 l
Wall-mounted - floor-standing	wall-mounted
Function	• with automatic lowering mechanism (SoftClosing) • with removable seat (QuickRelease)
Material	Sanitary ceramics
Colour name	White Alpin
Other material	Toilet seat and cover: Duroplast
Other surfaces	Toilet seat and cover: glossy
Shape	Oval
Colour designation	White Alpin
Other colour designations	Toilet seat and cover: White Alpin
Antibacterial surface (with AntiBac)	No
Easy surface cleaning (CeramicPlus)	No
Rimless (mit DirectFlush)	No
Flush type	Washdown toilet
Integrated freshness solution (with ViFresh)	No
Outlet / outlet	horizontal outlet

TECHNICAL DRAWINGS

5684H101

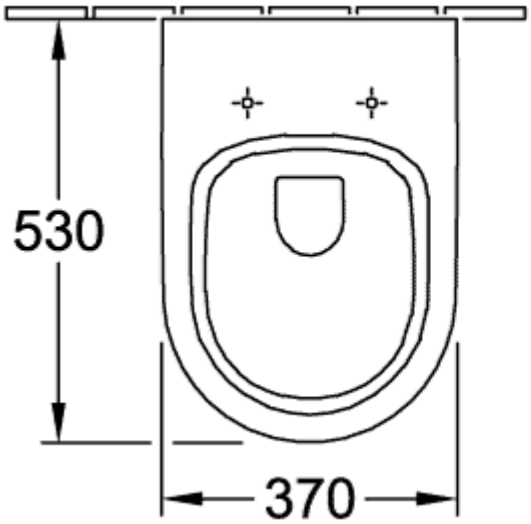

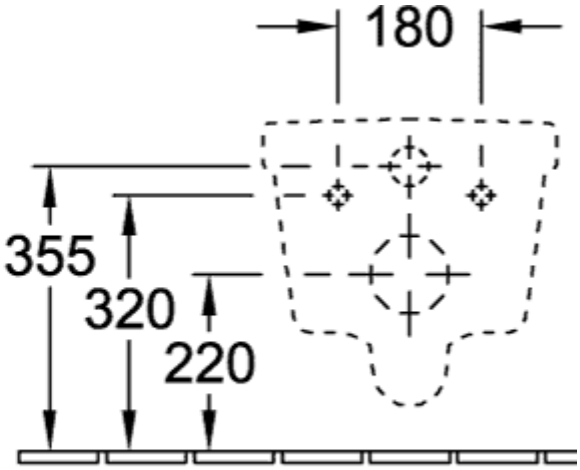
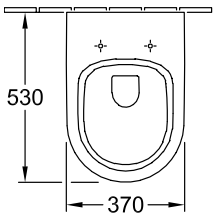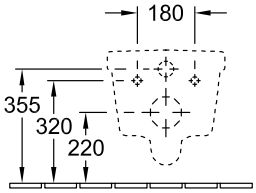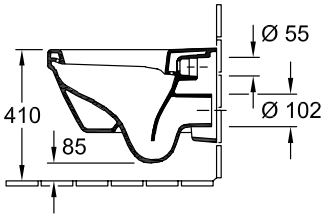
5684H101