ARCHITECTURA CISTERN

PRODUCT INFORMATION

Article title	Villeroy & Boch Architectura Cistern, water inlet from the sides or rear, White Alpin
Article number	5787G101
Scope of delivery	1 x cistern
Depth in mm	165
Width in mm	387
Height in mm	385
Collection	Architectura
Material	Sanitary ceramics
Colour name	White Alpin
Other material	Push button: ABS Flushing mechanism: Plastic
Other surfaces	Push button: chrome, glossy, Flushing mechanism: glossy
Colour designation	White Alpin
Other colour designations	Push button: Chrome, Flushing mechanism: White Alpin

TECHNICAL DRAWINGS

5787G101

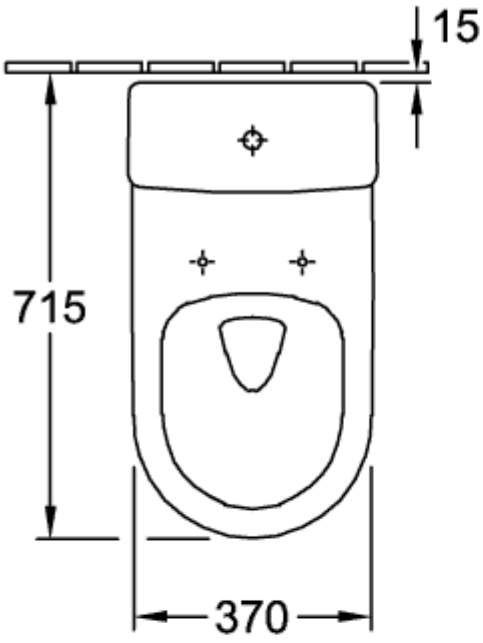
15
715
370

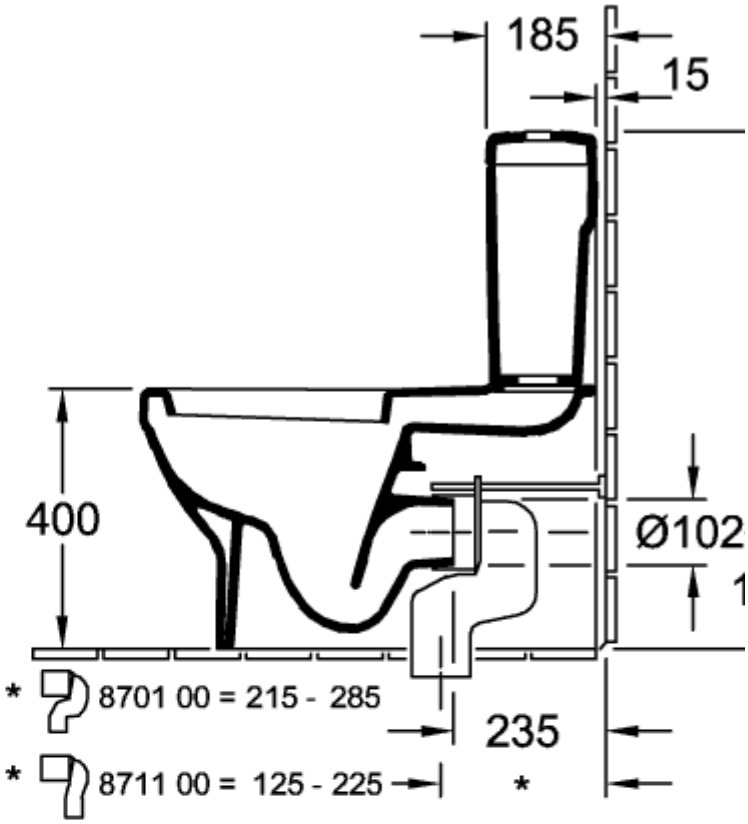
185
15
400
Ø102
1
* 8701 00 = 215 - 285
235
* 8711 00 = 125 - 225
*

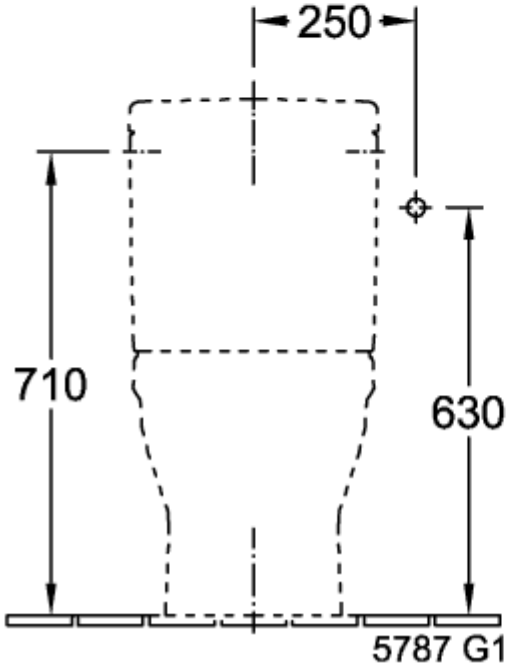
250
710
630
5787 G1

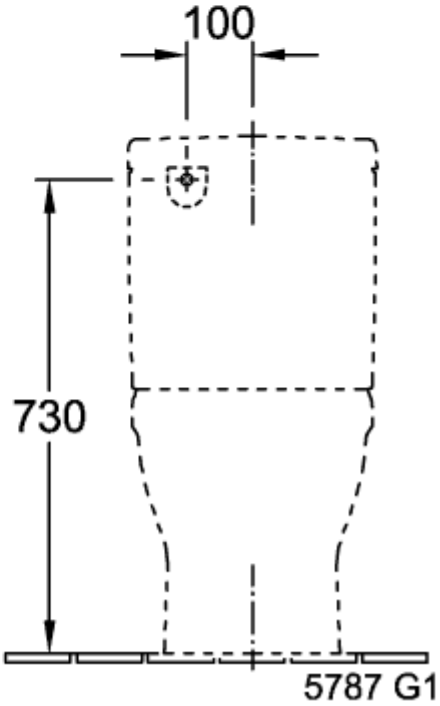
100
730
5787 G1

5787G101

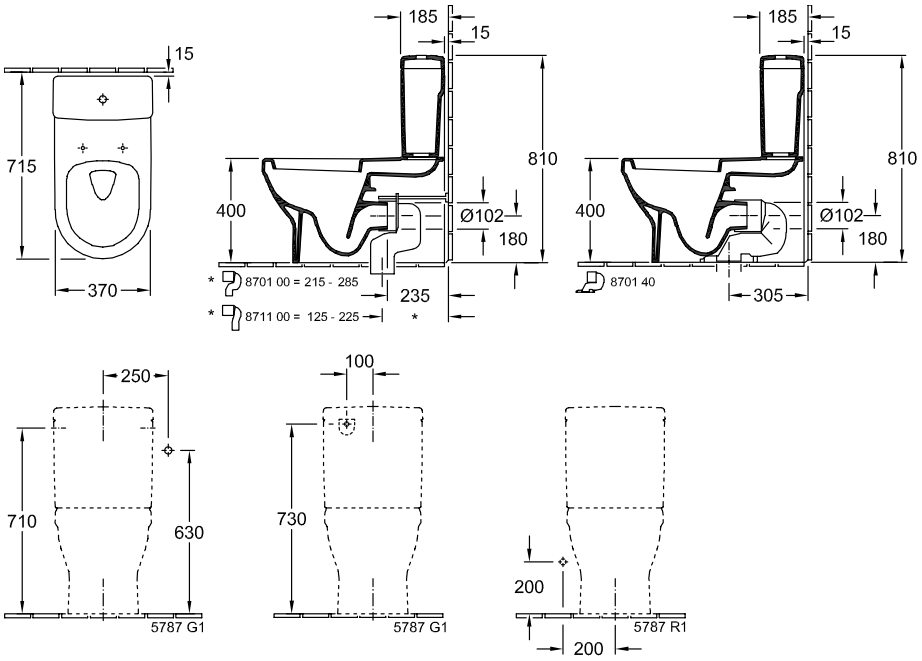
15
715
370
185
15
810
400
Ø102
180
* 8701 00 = 215 - 285
235
* 8711 00 = 125 - 225
*
185
15
810
400
Ø102
180
8701 40
305
250
710
630
5787 G1
100
730
5787 G1
200
5787 R1
200

5787G101

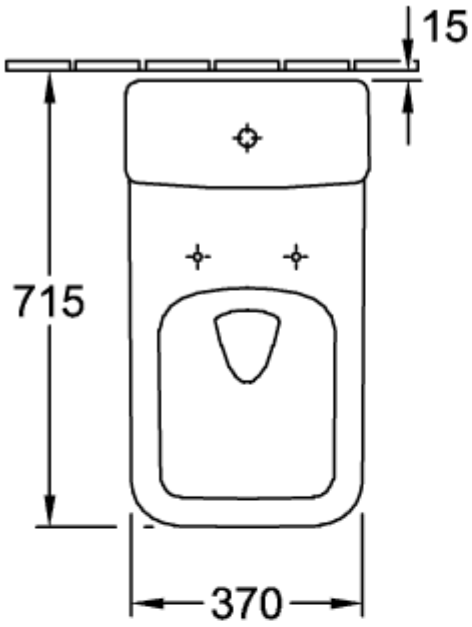
15
715
370

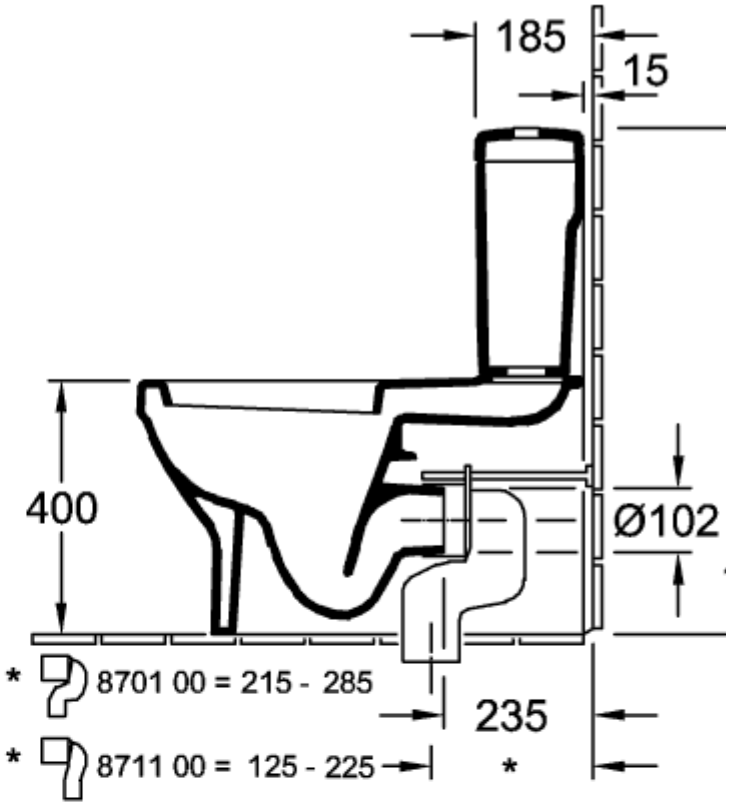
185
15
400
Ø102
* 8701 00 = 215 - 285
235
* 8711 00 = 125 - 225
*

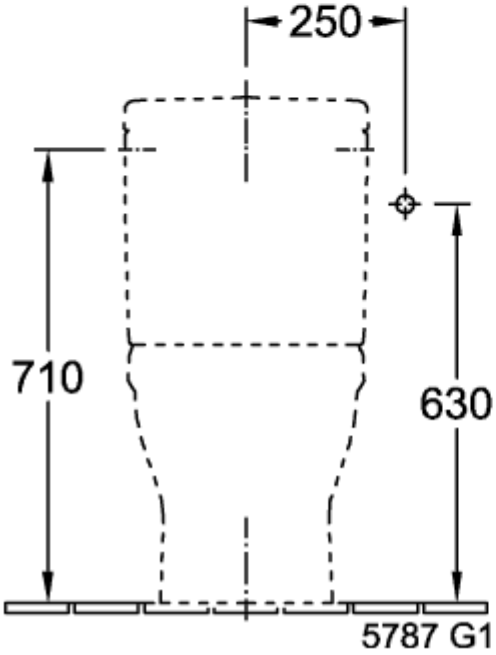
250
710
630
5787 G1

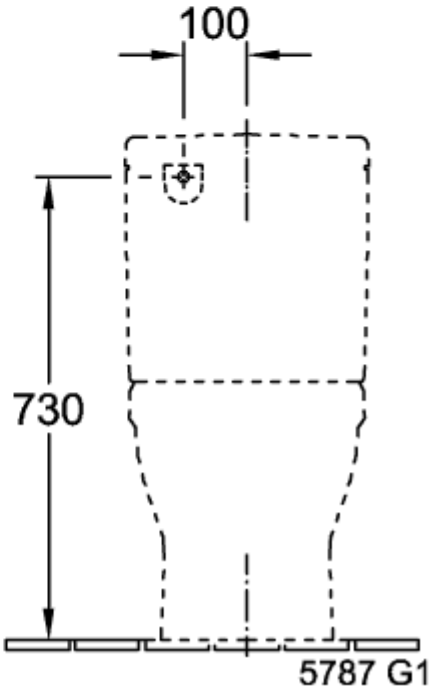
100
730
5787 G1

5787G101

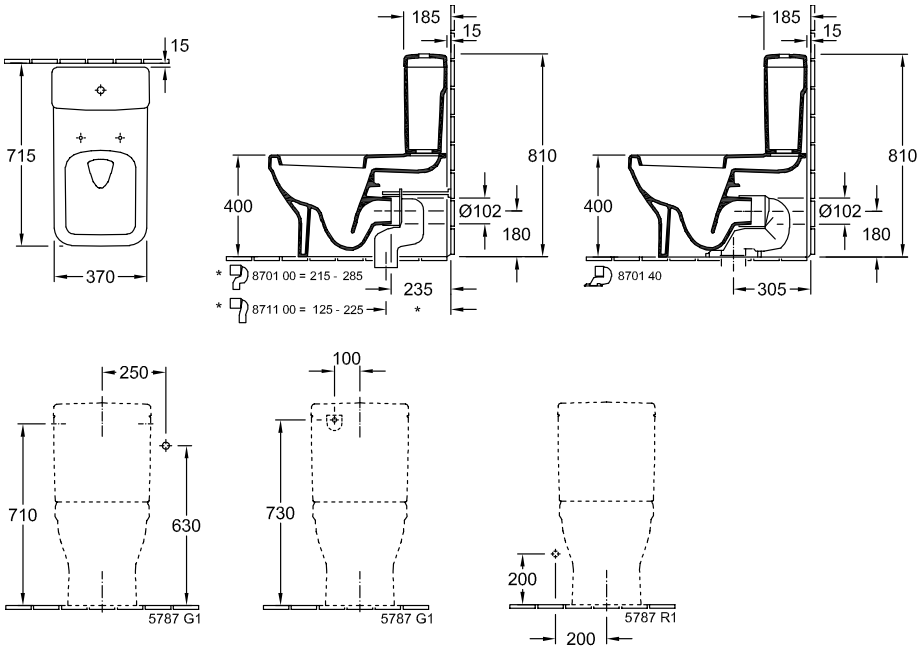
15
715
370
185
15
810
400
Ø102
180
* 8701 00 = 215 - 285
235
* 8711 00 = 125 - 225
*
185
15
810
400
Ø102
180
8701 40
305
250
710
630
5787 G1
100
730
5787 G1
200
5787 R1
200

5787G101

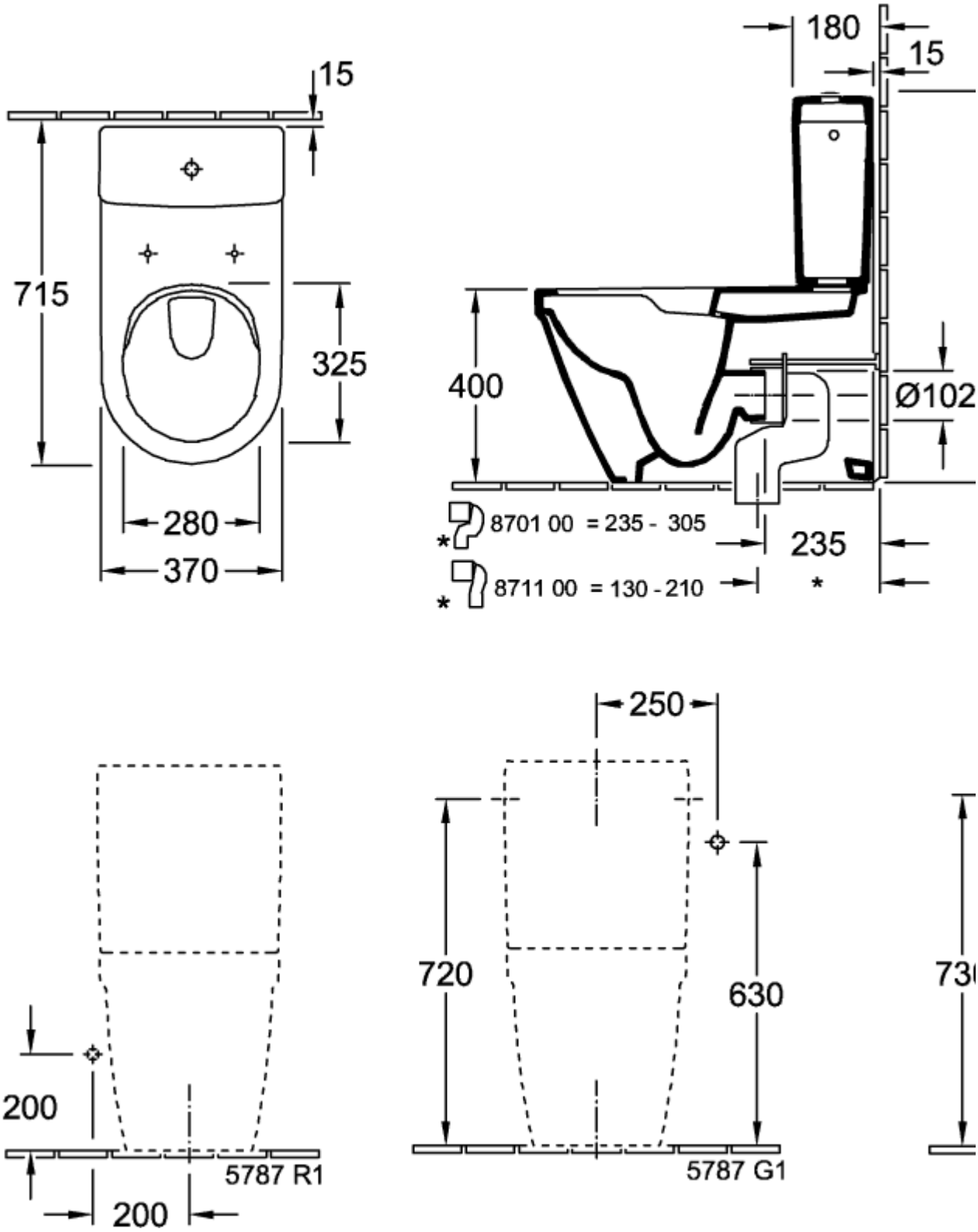
15
715
325
280
370
180
15
400
Ø102
8701 00 = 235 - 305
8711 00 = 130 - 210
235
*
250
720
630
200
5787 R1
200
5787 G1

5787G101

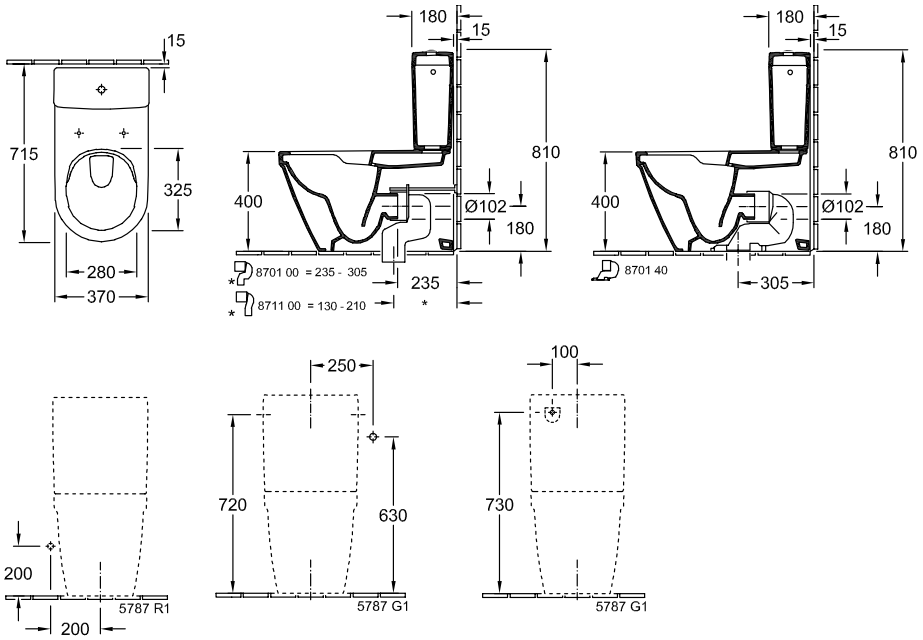
15
715
325
280
370
180
15
810
400
Ø102
180
8701 00 = 235 - 305
235
8711 00 = 130 - 210
180
15
810
400
Ø102
180
8701 40
305
250
720
630
5787 G1
100
730
5787 G1
200
5787 R1
200