SUBWAY INFINITY RECTANGULAR SHOWER TRAY RECTANGLE

PRODUCT INFORMATION

Article title	Villeroy & Boch Subway Infinity Rectangular shower tray, 1200 x 750 x 40 mm, White Alpin
Article number	6230P201
Assembly / Assembly type	flush-fitting installation, Installation on tiles|Installation on a base
Assembly instructions	The installation height of the shower tray can be reduced by 30 mm if the outlet fitting 9226 00 XX is used. Attention! This outlet fitting does not conform to EN274., These shower trays are cut on the long side and must be positioned with the cut side (not glazed) against the wall.
Scope of delivery	1 x rectangular shower tray
Length in mm	1200
Width in mm	750
Height in mm	40
Interior depth	12
Collection	Subway Infinity
Material	Sanitary ceramics
surface	matt
Colour name	White Alpin
Shape	Rectangle
Colour designation	White Alpin
Antibacterial surface (with AntiBac)	No
Easy surface cleaning (CeramicPlus)	No
With slip resistance	Yes

TECHNICAL DRAWINGS

6230P201

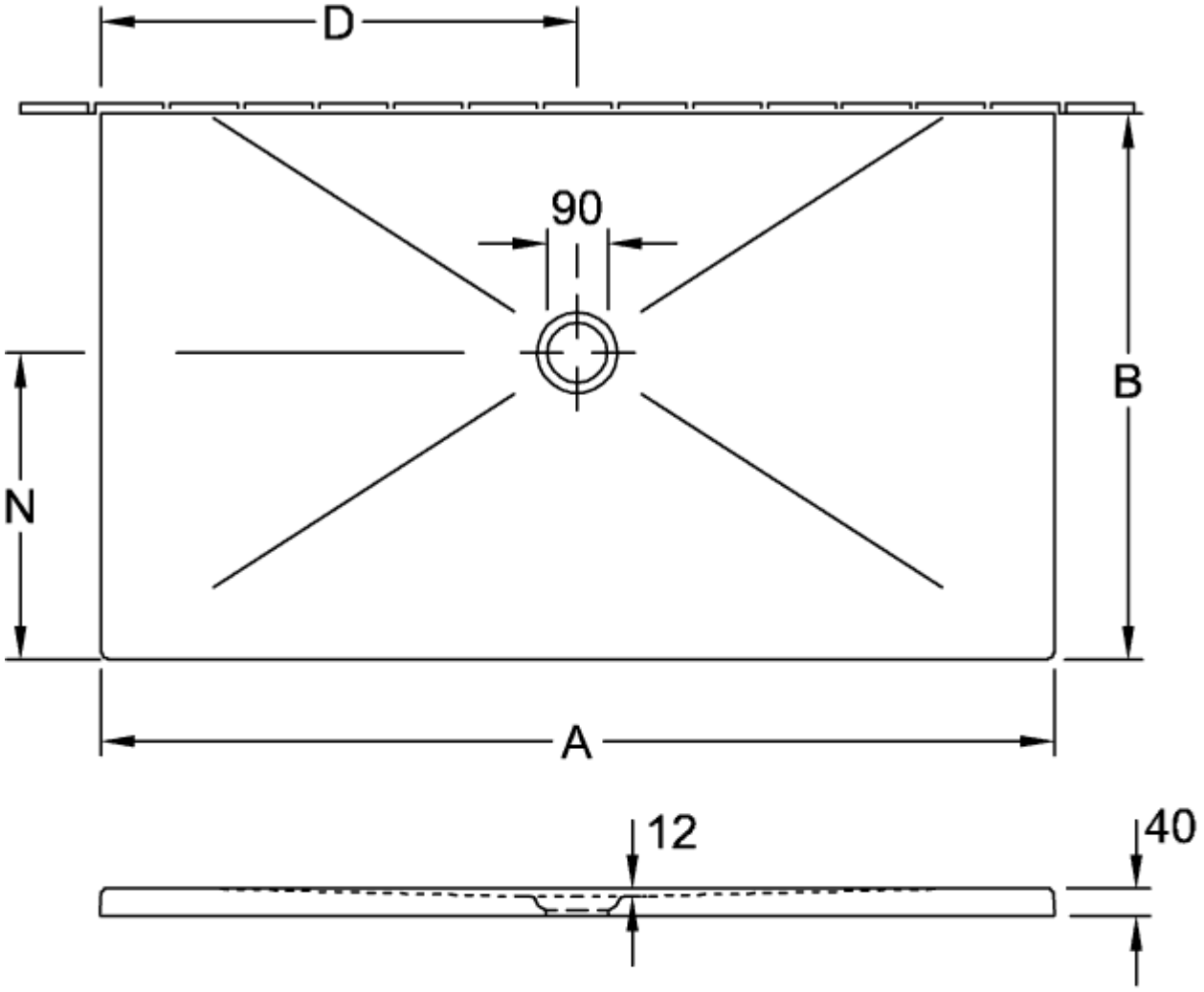

	A	B	D	N
6232 54	1600	900	800	500
6231 T3	1400	800	700	450
6231 T2	1400	750	700	450
6230 P3	1200	800	600	450
6230 P2	1200	750	600	450
6229 K2	1000	750	500	400
6229 K1	1000	700	500	400

6230P201

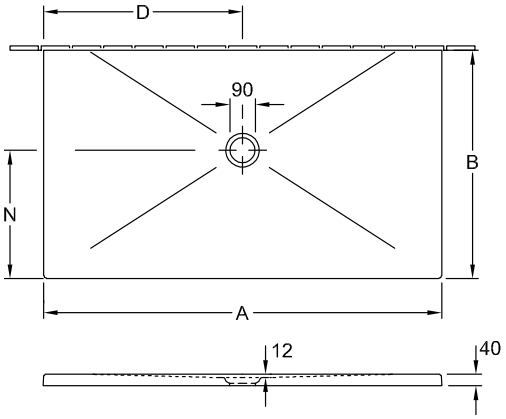

	A	B	D	N
6232 54	1600	900	800	500
6231 T3	1400	800	700	450
6231 T2	1400	750	700	450
6230 P3	1200	800	600	450
6230 P2	1200	750	600	450
6229 K2	1000	750	500	400
6229 K1	1000	700	500	400