# O.NOVO DOUBLE SINK RECTANGLE

## PRODUCT INFORMATION

| | |
|---|---|
| Article title | Villeroy & Boch O.novo Double sink, 510 x 795 x 220 mm, White Alpin, with overflow |
| Article number | 63310001 |
| Assembly / Assembly type | wall-mounted |
| Assembly instructions | fastening with mounting-brackets, fastening with profile iron |
| Scope of delivery | 1 x sink |
| Depth in mm | 795 |
| Width in mm | 510 |
| Height in mm | 220 |
| Interior depth | 200 |
| Collection | O.novo |
| Material | Sanitary ceramics |
| surface | glossy |
| Colour name | White Alpin |
| With overflow | Yes |
| Shape | Rectangle |
| Colour designation | White Alpin |
| Antibacterial surface (with AntiBac) | No |
| Easy surface cleaning (CeramicPlus) | No |
| Number of bowls | 2 |

## TECHNICAL DRAWINGS

**63310001**

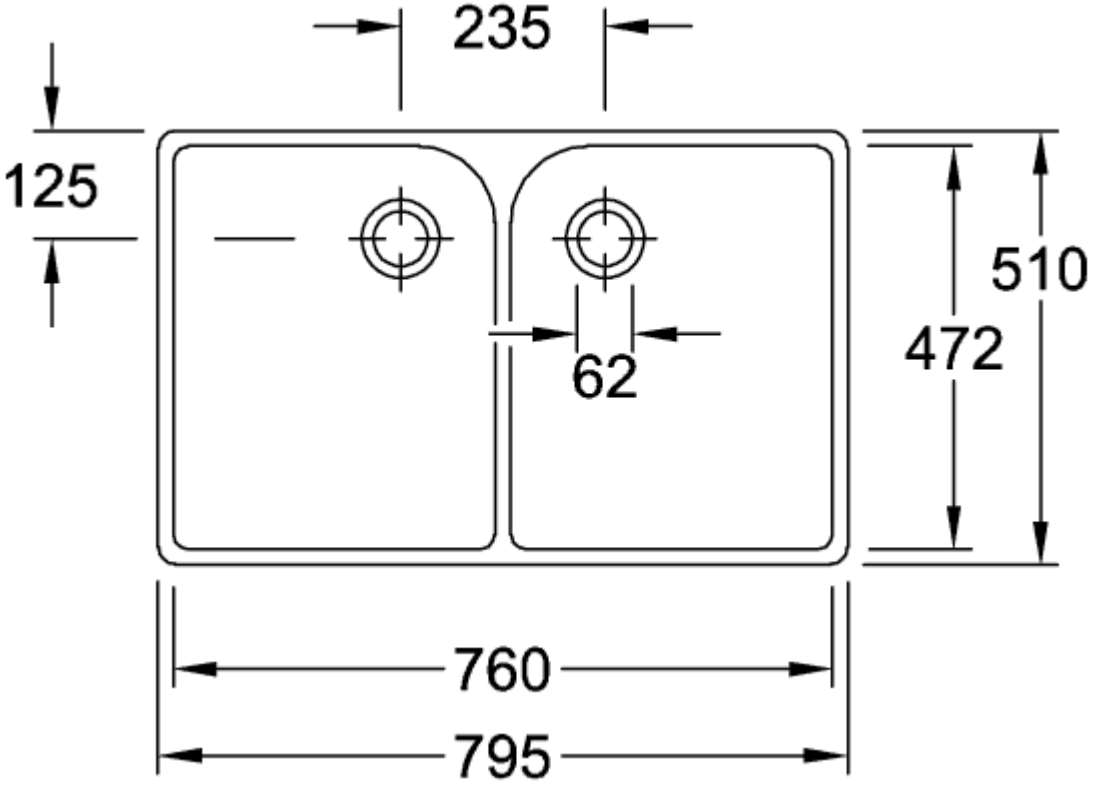


**63310001**

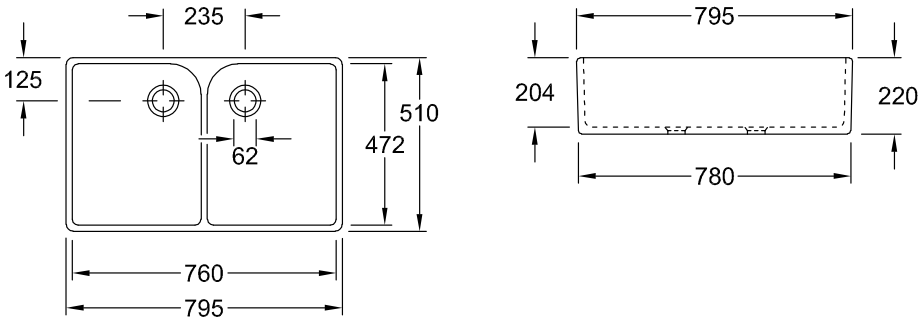

**63310001**

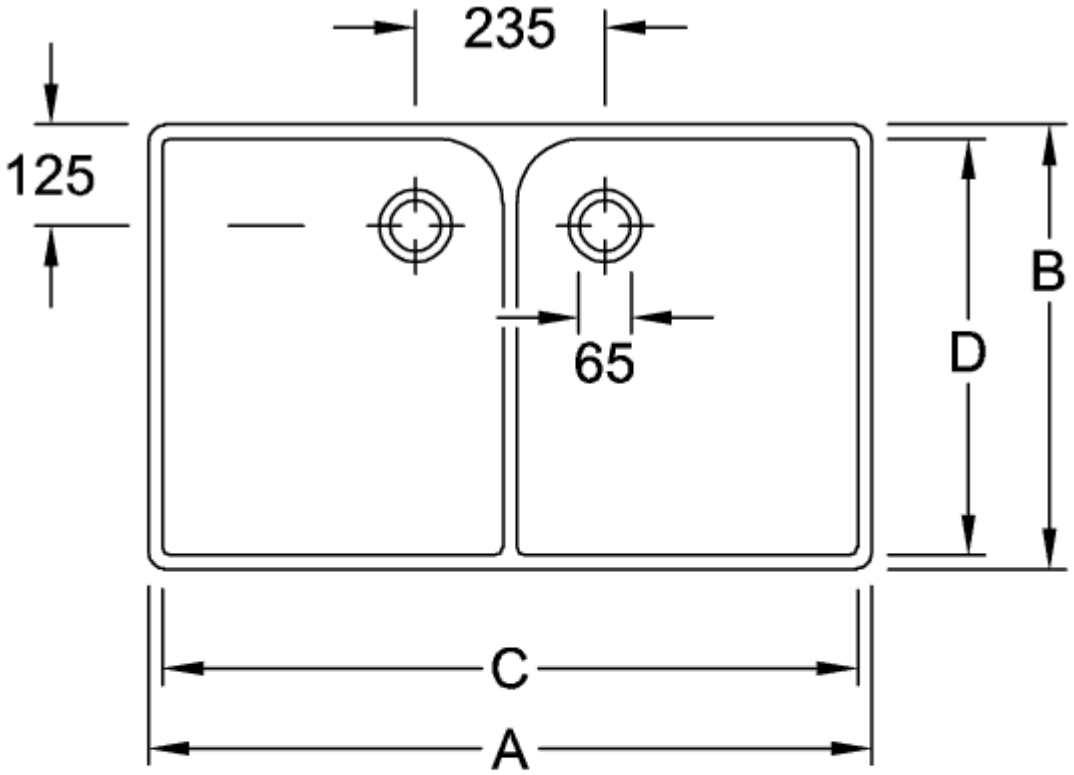


| | A | B | C | D | E |
|---|---|---|---|---|---|
| 6331 00 | 795 | 510 | 760 | 465 | 785 |
| 6332 00 | 895 | 550 | 860 | 515 | 885 |

**63310001**

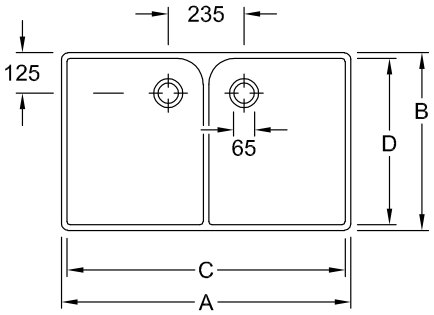


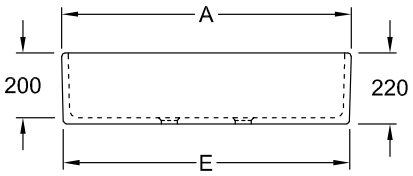


| | A | B | C | D | E |
|---|---|---|---|---|---|
| 6331 00 | 795 | 510 | 760 | 465 | 785 |
| 6332 00 | 895 | 550 | 860 | 515 | 885 |