O.NOVO CORNER HANDWASHBASIN QUARTER CIRCLE

PRODUCT INFORMATION

Article title	Villeroy & Boch O.novo Corner handwashbasin, 400 x 320 x 145 mm, White Alpin, without overflow, unground
Article number	73103301
Assembly / Assembly type	Corner installation
Scope of delivery	1 x corner handwashbasin
Depth in mm	320
Width in mm	400
Height in mm	145
Interior depth	85
Collection	O.novo
Suitable for	1-hole mixer
Material	Sanitary ceramics
surface	glossy
Colour name	White Alpin
With overflow	No
Shape	Quarter circle
Colour designation	White Alpin
Antibacterial surface (with AntiBac)	No
Easy surface cleaning (CeramicPlus)	No
Number of tap holes punched through	1
Underside of washbasin	unground
Number of bowls	1

TECHNICAL DRAWINGS

73103301

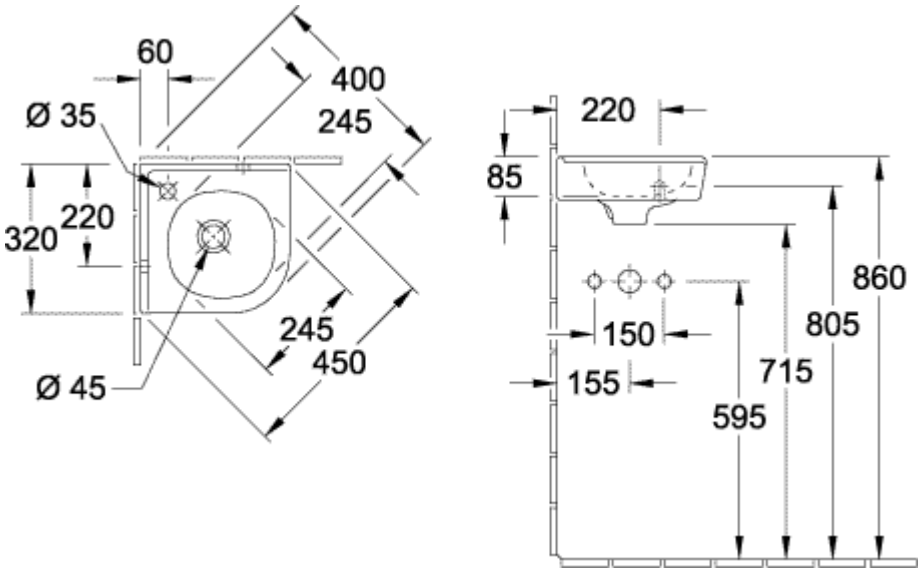
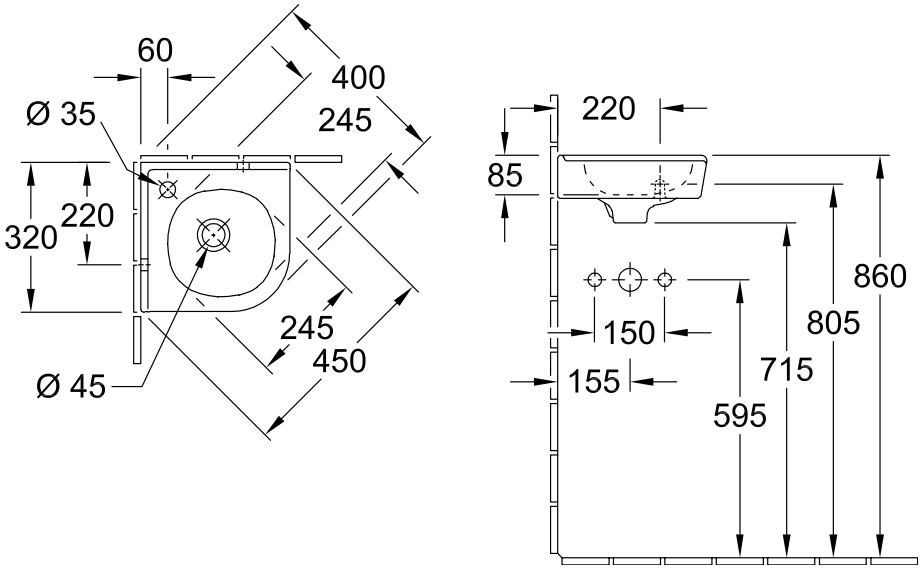
73103301