SUBWAY 2.0 VANITY UNIT ANGULAR

PRODUCT INFORMATION

Article title	Villeroy & Boch Subway 2.0 Vanity unit, 2 pull-out compartments, 787 x 590 x 449 mm, Black Matt Lacquer
Article number	A91410PD
Assembly / Assembly type	wall-mounted
Type of opening	2 pull-out compartments
Equipment	6 x narrow glass drawer divider , 1 x accessory box S 1 x accessory box M 1 x accessory box L 2 x pull-out compartment
Scope of delivery	1 x vanity unit , 1 x fastening set
Position of washbasin	washbasin on the middle
Depth in mm	449
Width in mm	787
Height in mm	590
Collection	Subway 2.0
Suitable for	selected vanity washbasins
Function	with SoftClosing
Material front	MDF
Surface of front	Paint
Material body	MDF
Surface of body	Paint
Other material	Handle: Plastic
Other surfaces	Handle: Paint, glossy
Shape	Angular
Colour designation	Black Matt Lacquer
Other colour designations	Handle: glossy chrome-coloured
With lighting	No
Smart home compatible	No

TECHNICAL DRAWINGS

A91410PD

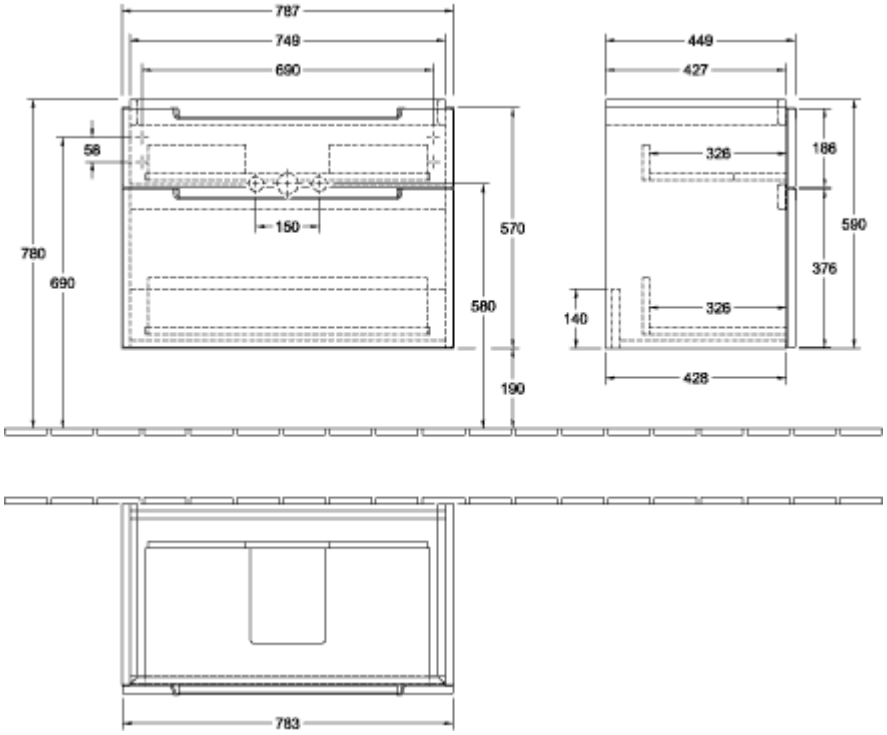
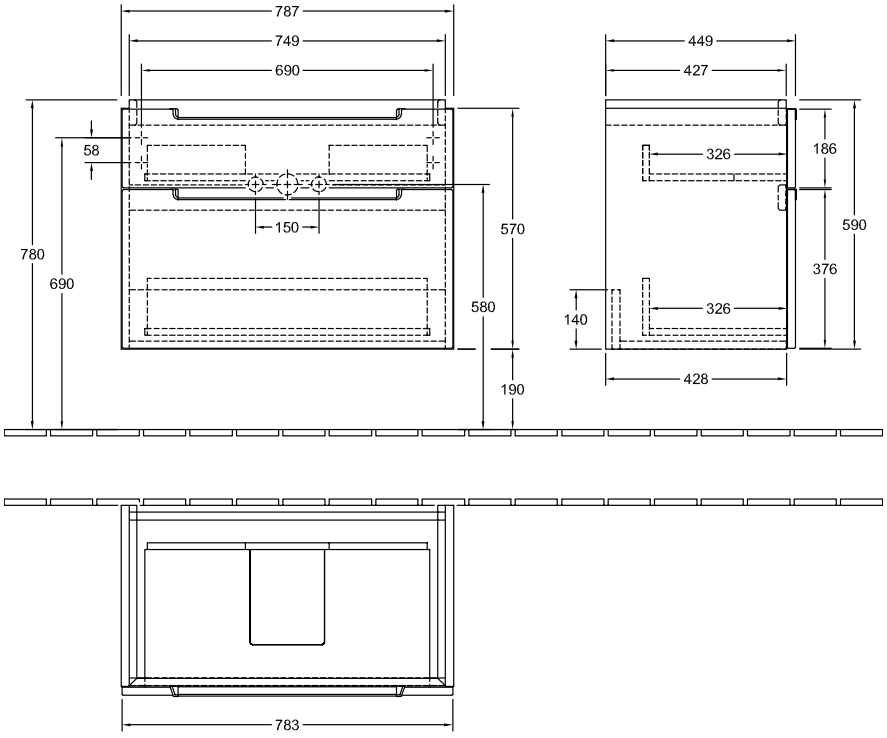
A91410PD