VENTICELLO VANITY UNIT ANGULAR

PRODUCT INFORMATION

Article title	Villeroy & Boch Venticello Vanity unit, 1 pull-out compartment, 957 x 436 x 502 mm, Black Matt Lacquer / Black Matt Lacquer
Article number	A94801PD
Assembly / Assembly type	wall-mounted
Type of opening	1 pull-out compartment
Equipment	1 x wide glass drawer divider , 2 x narrow glass drawer divider 1 x accessory box L 1 x pull-out compartment
Scope of delivery	1 x vanity unit , 1 x fastening set
Position of washbasin	washbasin on right
Furniture with tap hole	Tap hole pre-drilled at the factory
Depth in mm	502
Width in mm	957
Height in mm	436
Depth with handle mm	502
Depth without handle mm	477
Collection	Venticello
Suitable for	selected surface-mounted washbasins
Function	with SoftClosing
Material front	MDF
Surface of front	Paint
Material body	MDF
Surface of body	Paint
Material cover panel	MDF
Other material	Handle: aluminium
Other surfaces	Handle: Chrome, glossy
Shape	Angular
Colour designation	Black Matt Lacquer
Colour designation of cover panel	Black Matt Lacquer
Other colour designations	Handle: Chrome
With lighting	No
Smart home compatible	No

TECHNICAL DRAWINGS

A94801PD

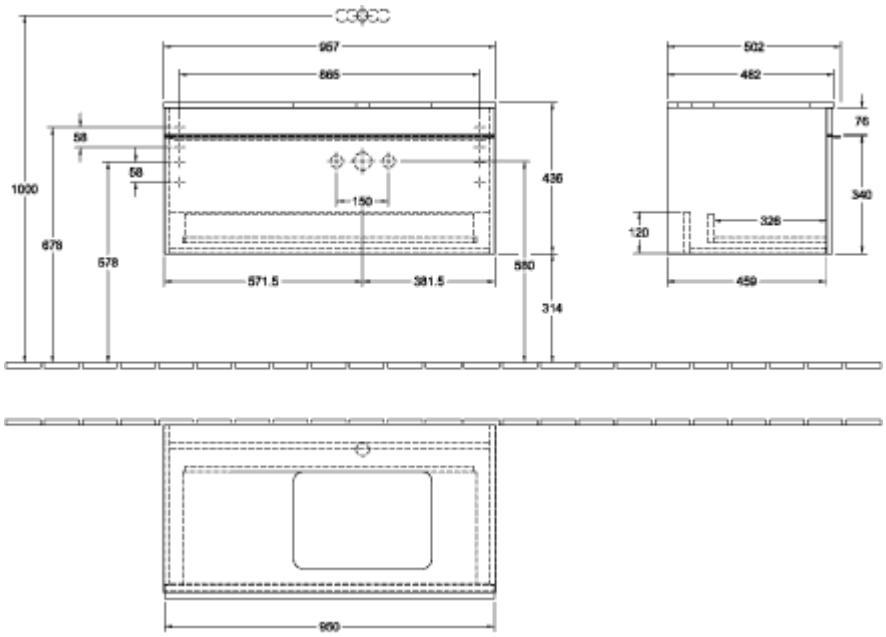
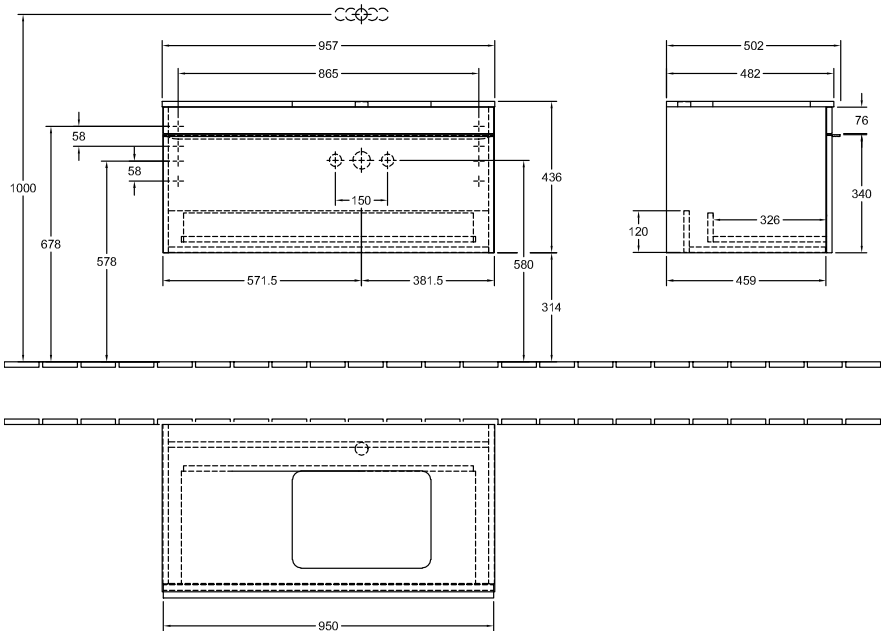
A94801PD