# LEGATO VANITY UNIT ANGULAR

## PRODUCT INFORMATION

| | |
|---|---|
| Article title | Villeroy & Boch Legato Vanity unit, with lighting, 2 pull-out compartments, 1000 x 550 x 500 mm, Glossy White / Glossy White |
| Article number | B572L0DH |
| Assembly / Assembly type | wall-mounted |
| Type of opening | 2 pull-out compartments |
| Equipment | 1 x wide glass drawer divider , 2 x narrow glass drawer divider 1 x accessory box L 2 x pull-out compartment with non-slip mat |
| Scope of delivery | 1 x vanity unit , 1 x fastening set |
| Position of washbasin | washbasin on the middle |
| Furniture with tap hole | Tap hole pre-drilled at the factory |
| Depth in mm | 500 |
| Width in mm | 1000 |
| Height in mm | 550 |
| Collection | Legato |
| Suitable for | selected surface-mounted washbasins |
| Function | • with SoftClosing<br>• with lighting |
| Material front | MDF |
| Surface of front | Acrylic film |
| Material body | MDF |
| Surface of body | Acrylic film |
| Material cover panel | Chipboard |
| Shape | Angular |
| Colour designation | Glossy White |
| Colour designation of cover panel | Glossy White |
| With lighting | Yes |
| Smart home compatible | No |

# TECHNICAL DRAWINGS

**B572L0DH**

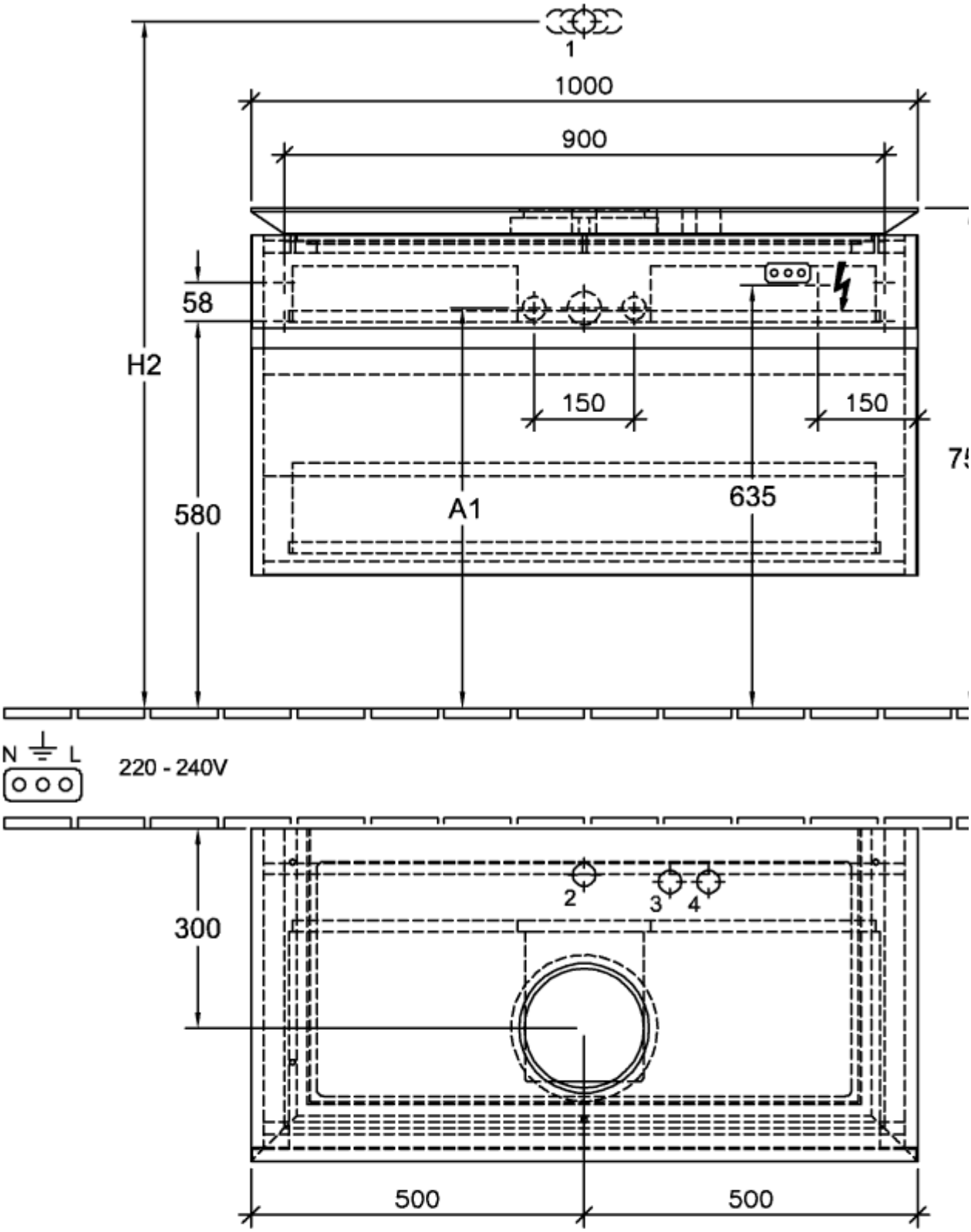
1
1000
900
58
H2
150
150
580
A1
635
N
L
220 - 240V
300
2
3
4
500
500

# B572L0DH

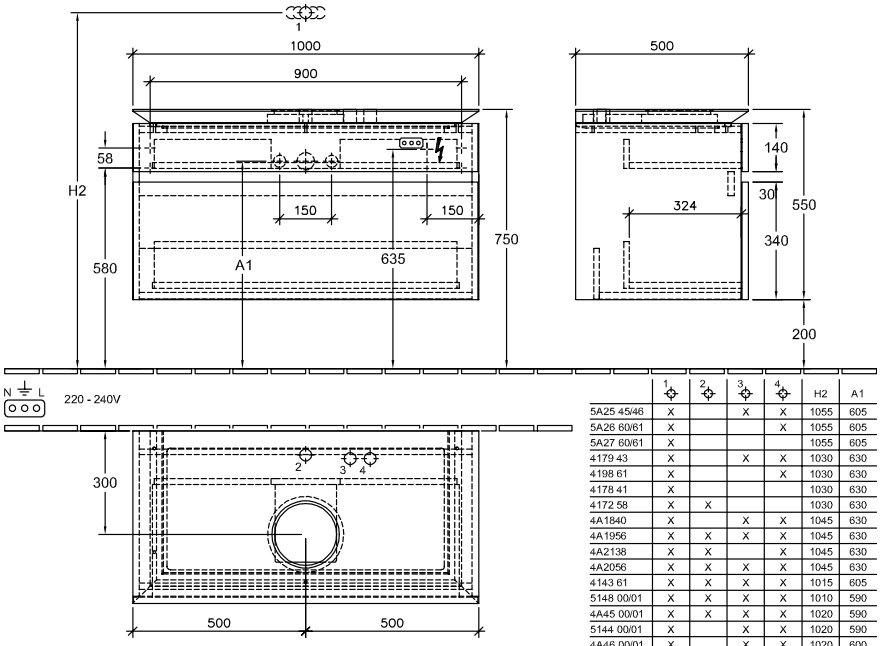


| | 1 | 2 | 3 | 4 | H2 | A1 |
|---|---|---|---|---|---|---|
| 5A25 45/46 | X | | X | X | 1055 | 605 |
| 5A26 60/61 | X | | | X | 1055 | 605 |
| 5A27 60/61 | X | | | | 1055 | 605 |
| 4179 43 | X | | X | X | 1030 | 630 |
| 4198 61 | X | | | X | 1030 | 630 |
| 4178 41 | X | | | | 1030 | 630 |
| 4172 58 | X | X | | | 1030 | 630 |
| 4A1840 | X | | X | X | 1045 | 630 |
| 4A1956 | X | X | X | X | 1045 | 630 |
| 4A2138 | X | X | | X | 1045 | 630 |
| 4A2056 | X | X | X | X | 1045 | 630 |
| 4143 61 | X | X | X | X | 1015 | 605 |
| 5148 00/01 | X | X | X | X | 1010 | 590 |
| 4A45 00/01 | X | X | X | X | 1020 | 590 |
| 5144 00/01 | X | | X | X | 1020 | 590 |
| 4A46 00/01 | X | | X | X | 1020 | 600 |
| 5151 00/01 | X | X | X | X | 1010 | 590 |
| 4A47 00/01 | X | X | X | X | 1010 | 600 |
| 5151 10/11 | X | | | X | 1020 | 590 |
| 4A48 00/01 | X | | | X | 1020 | 600 |
| 5154 00/01 | X | X | | | 1010 | 590 |
| 4A49 00/01 | X | X | | | 1020 | 600 |
| 4A50 00/01 | X | | | | 1015 | 595 |
| 4110 60 | X | X | | | 1005 | 595 |