LEGATO VANITY UNIT ANGULAR

PRODUCT INFORMATION

Article title	Villeroy & Boch Legato Vanity unit, 5 pull-out compartments, 1400 x 550 x 500 mm, Glossy White / Glossy White
Article number	B69900DH
Assembly / Assembly type	wall-mounted
Type of opening	5 pull-out compartments
Equipment	2 x wide glass drawer divider , 4 x narrow glass drawer divider 2 x accessory box L 5 x pull-out compartment with non-slip mat
Scope of delivery	1 x vanity unit , 1 x fastening set
Position of washbasin	washbasin on the middle
Depth in mm	500
Width in mm	1400
Height in mm	550
Collection	Legato
Suitable for	selected vanity washbasins
Function	with SoftClosing
Material front	MDF
Surface of front	Acrylic film
Material body	MDF
Surface of body	Acrylic film
Material cover panel	Chipboard
Shape	Angular
Colour designation	Glossy White
Colour designation of cover panel	Glossy White
With lighting	No
Smart home compatible	No

TECHNICAL DRAWINGS

B69900DH

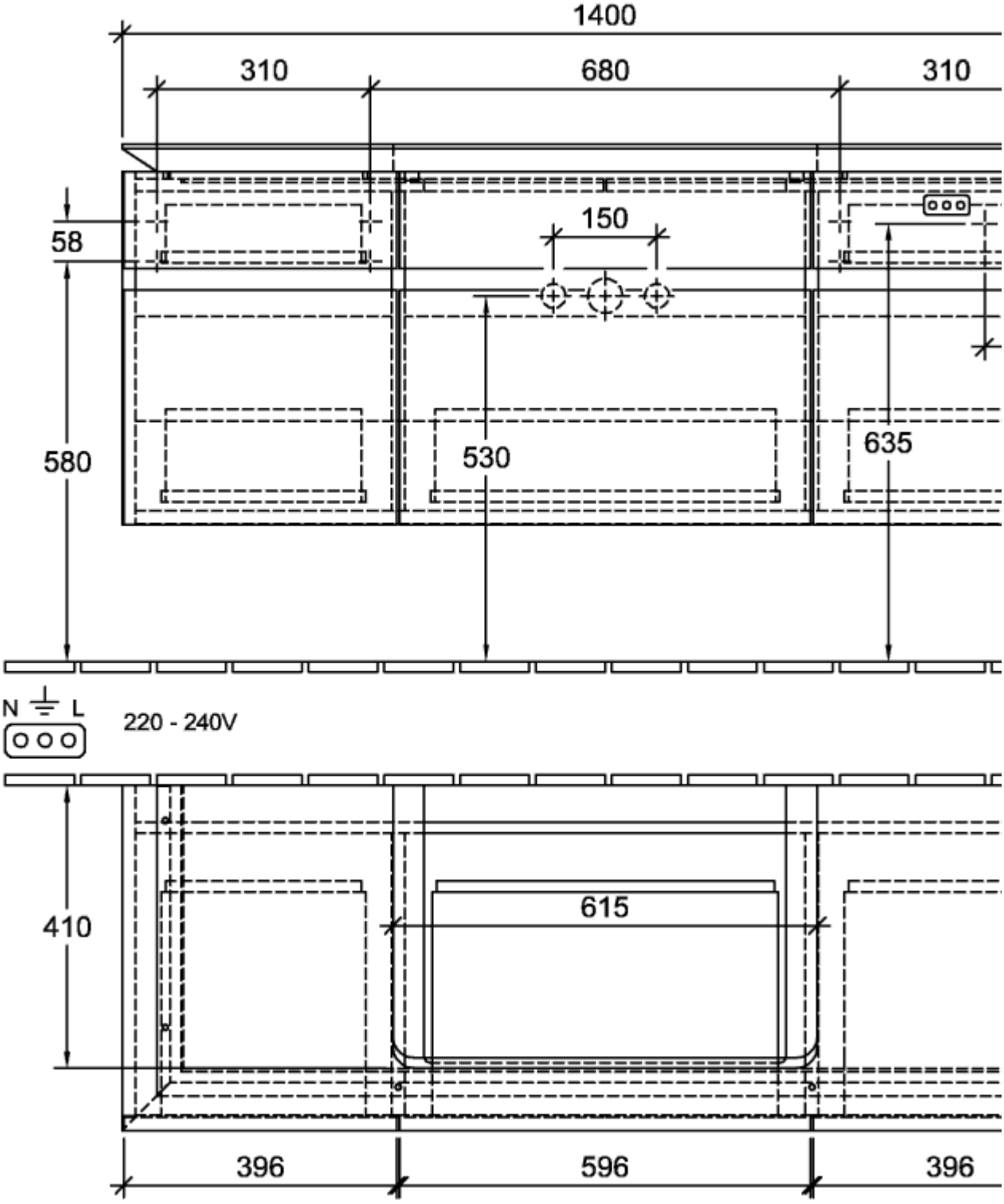

B69900DH

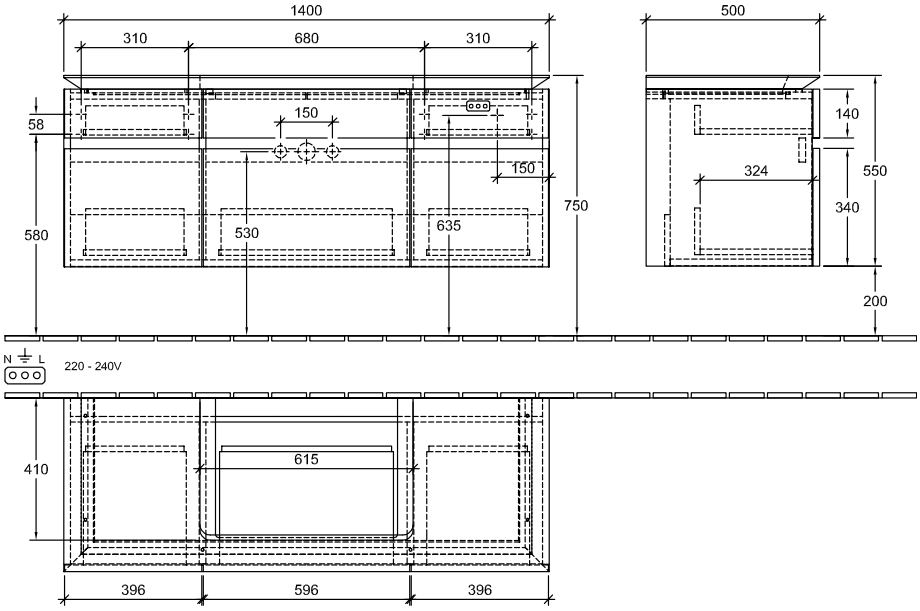
1400
310
680
310
500
58
150
150
140
324
550
340
750
580
530
635
200
N
L
220 - 240V
410
615
396
596
396