ARCHITECTURA RECTANGULAR BATH RECTANGLE

PRODUCT INFORMATION

Article title	Villeroy & Boch Architectura Rectangular bath, 1500 x 700 mm, White Alpin
Article number	UBA157ARA2V-01
Assembly / Assembly type	built-in installation
Scope of delivery	1 x rectangular bath
Length in mm	1500
Width in mm	700
Height in mm	485
Interior depth	460
Collection	Architectura
Material	Acrylic
Colour name	White Alpin
With overflow	Yes
Number of people	1
Shape	Rectangle
Colour designation	White Alpin
With slip resistance	No
Outlet / outlet	outlet at the foot end
Interior form	rectangular
SilentFlow	No

TECHNICAL DRAWINGS

UBA157ARA2V-01

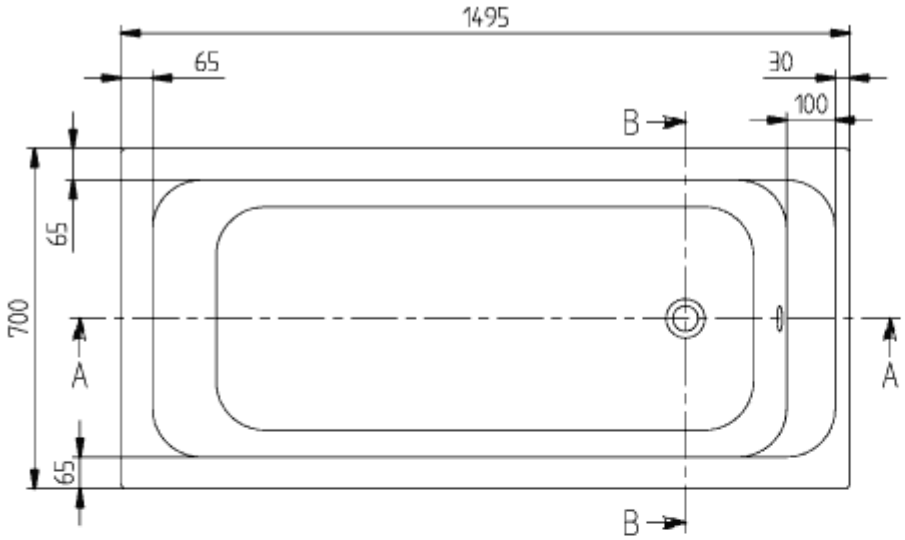

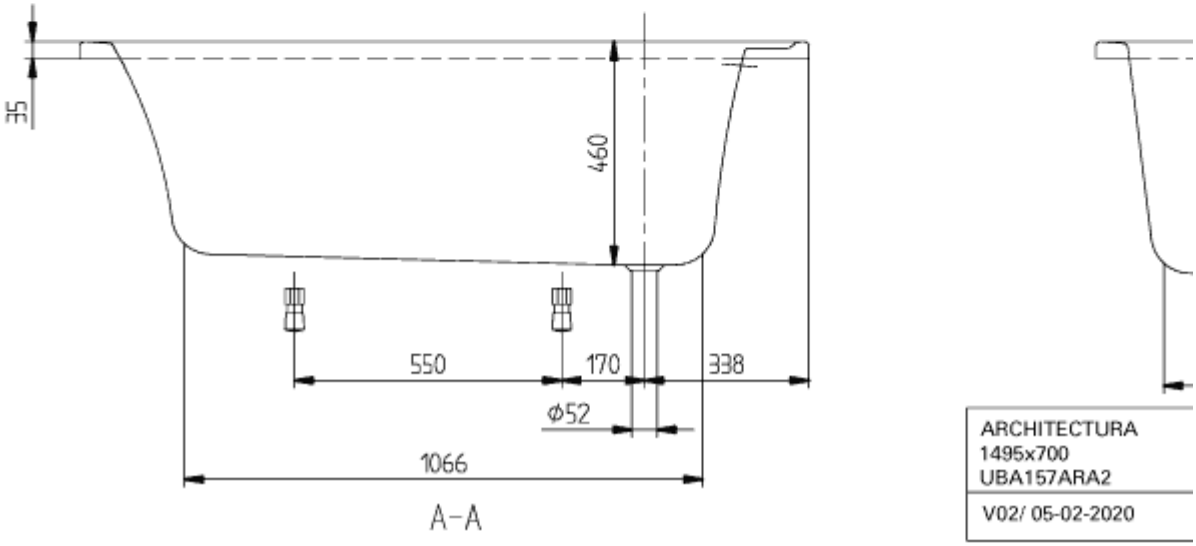
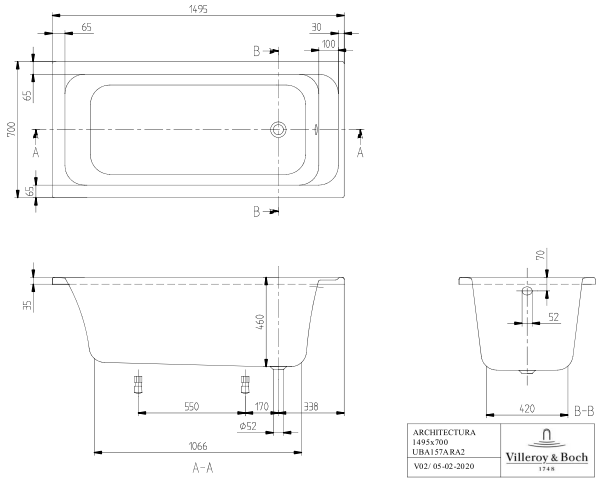
UBA157ARA2V-01