# LOOP & FRIENDS FREE-STANDING BATH FREE-STANDING

## PRODUCT INFORMATION

| | |
|---|---|
| Article title | Villeroy & Boch Loop & Friends Free-standing bath SQUARE ColourOnDemand, 1800 x 800 mm, White Alpin |
| Article number | UBA180LFS7PDBCV-01 |
| Assembly / Assembly type | freestanding |
| Scope of delivery | 1 x free-standing bath , 1 x extended outlet and overflow (chrome-plated) |
| Length in mm | 1800 |
| Width in mm | 800 |
| Height in mm | 465 |
| Interior depth | 440 |
| Collection | Loop & Friends |
| Material | Acrylic |
| Colour name | White Alpin |
| Other material | Waste/overflow combination: Plastic Outlet cover: Plastic |
| Other surfaces | Waste/overflow combination: glossy, Outlet cover: glossy |
| With overflow | Yes |
| Number of people | 2 |
| Shape | Free-standing |
| Colour designation | White Alpin |
| Other colour designations | Waste/overflow combination: Chrome, Outlet cover: Chrome |
| With slip resistance | No |
| Outlet / outlet | central outlet |
| Interior form | rectangular |
| SilentFlow | No |

## TECHNICAL DRAWINGS

### UBA180LFS7PDBCV-01

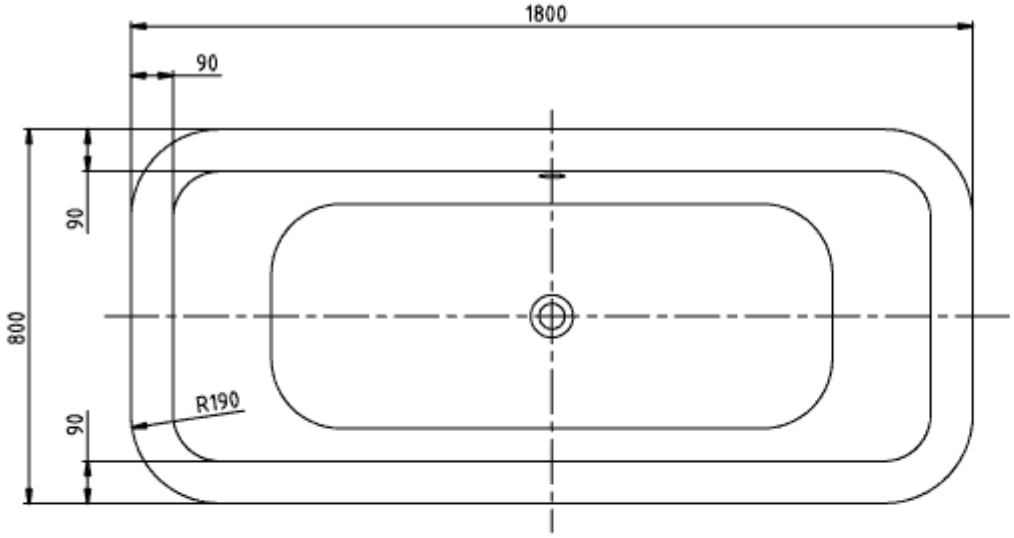


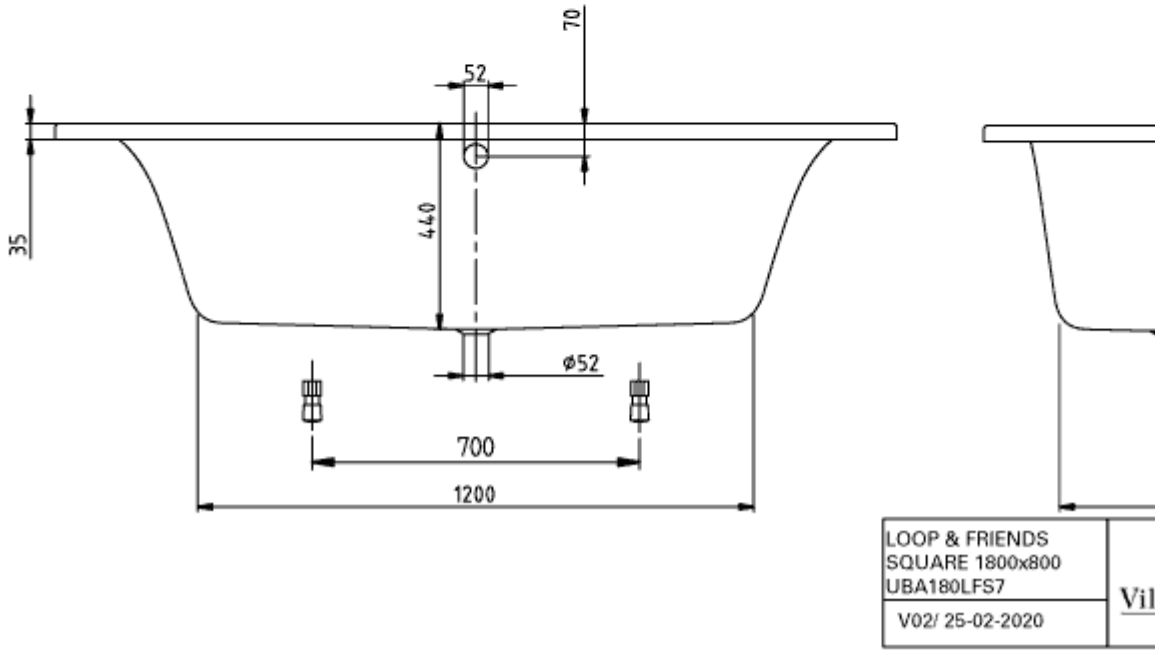

# UBA180LFS7PDBCV-01

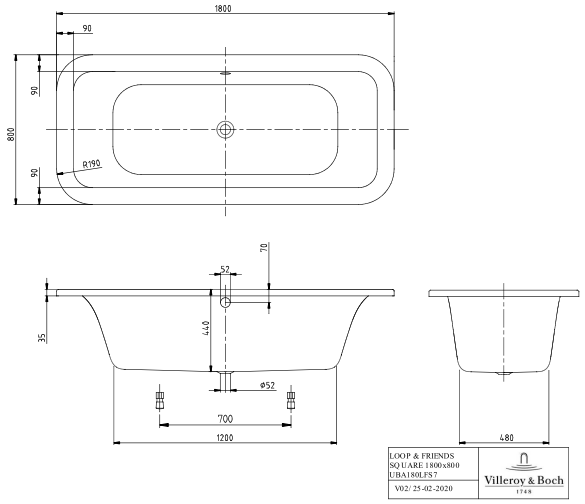

**UBA180LFS7PDBCV-01**

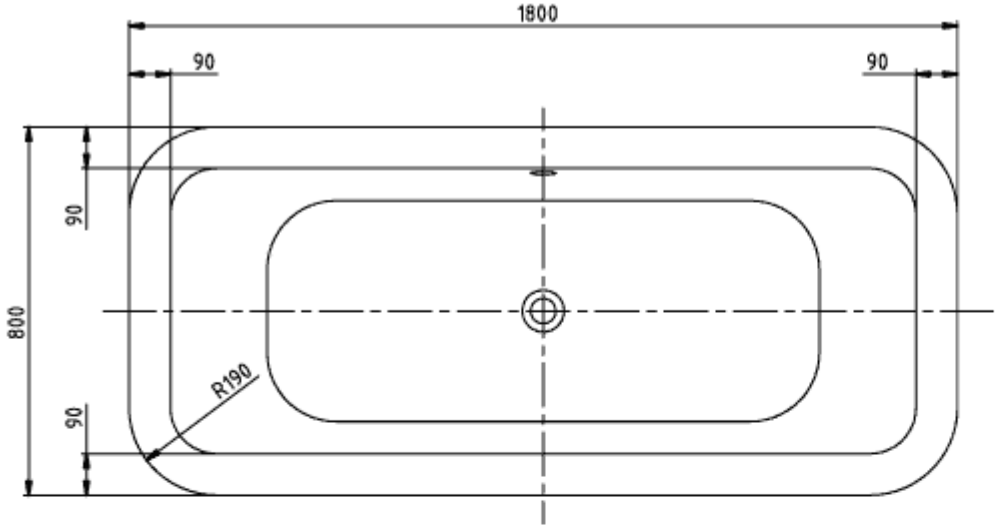


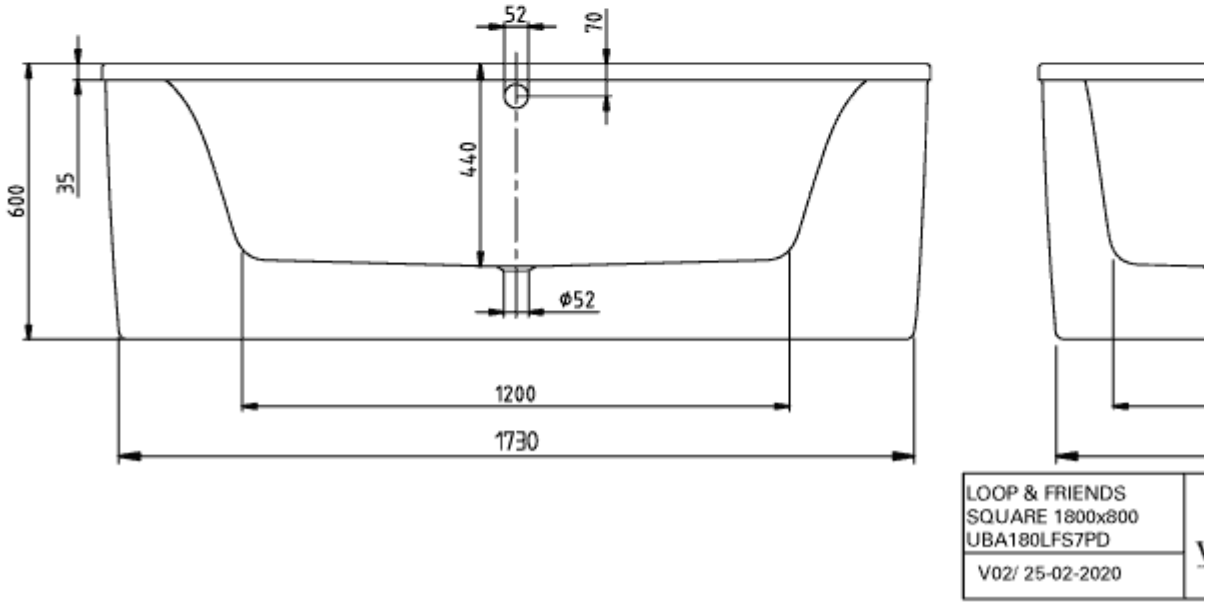
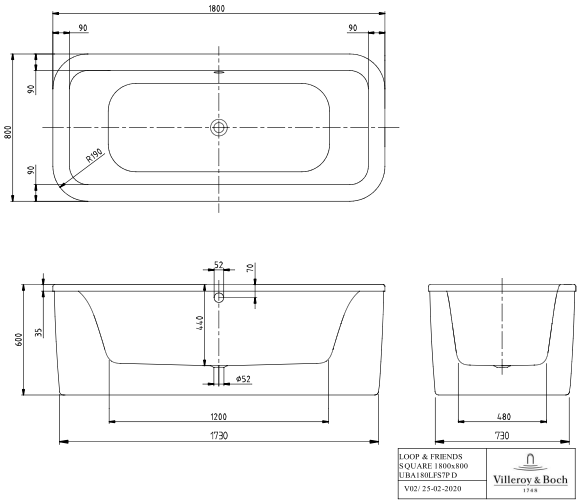
# UBA180LFS7PDBCV-01