LEGATO RECTANGULAR BATH RECTANGLE

PRODUCT INFORMATION

Article title	Villeroy & Boch Legato Rectangular bath, 1900 x 900 mm, White Alpin
Article number	UBA199LEG2V-01
Assembly / Assembly type	built-in installation
Scope of delivery	1 x rectangular bath
Length in mm	1900
Width in mm	900
Height in mm	505
Interior depth	480
Collection	Legato
Material	Acrylic
Colour name	White Alpin
With overflow	Yes
Number of people	2
Shape	Rectangle
Colour designation	White Alpin
With slip resistance	No
Outlet / outlet	central outlet
Interior form	rectangular
SilentFlow	No

TECHNICAL DRAWINGS

UBA199LEG2V-01

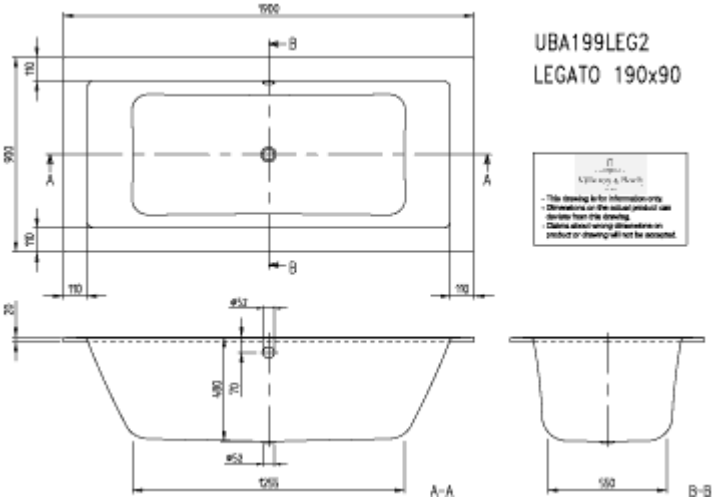
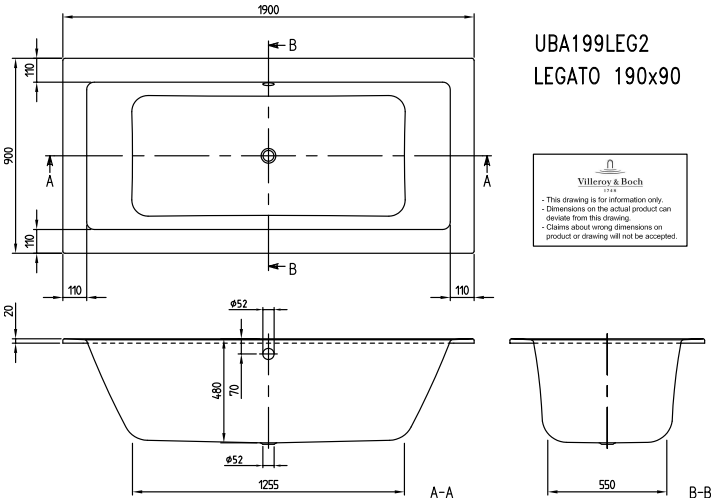
UBA199LEG2V-01