SUBWAY SQUARE SHOWER TRAY SQUARE

PRODUCT INFORMATION

Article title	Villeroy & Boch Subway Square shower tray, 1000 x 1000 x 35 mm, White Alpin
Article number	UDA1035SUB1V-01
Assembly / Assembly type	Surface-mounted, Corner installation|flush-fitting installation| Installation on a base
Assembly instructions	The installation height of the shower tray can be reduced by 30 mm if the Viega outlet fitting art. no. 634 100 is used. Please note: this outlet fitting does not conform to EN 274.
Scope of delivery	1 x square shower tray
Length in mm	1000
Width in mm	1000
Height in mm	35
Interior depth	35
Collection	Subway
Material	Acrylic
Colour name	White Alpin
Shape	Square
Colour designation	White Alpin
Antibacterial surface (with AntiBac)	No
Easy surface cleaning (CeramicPlus)	No
With slip resistance	No

TECHNICAL DRAWINGS

UDA1035SUB1V-01

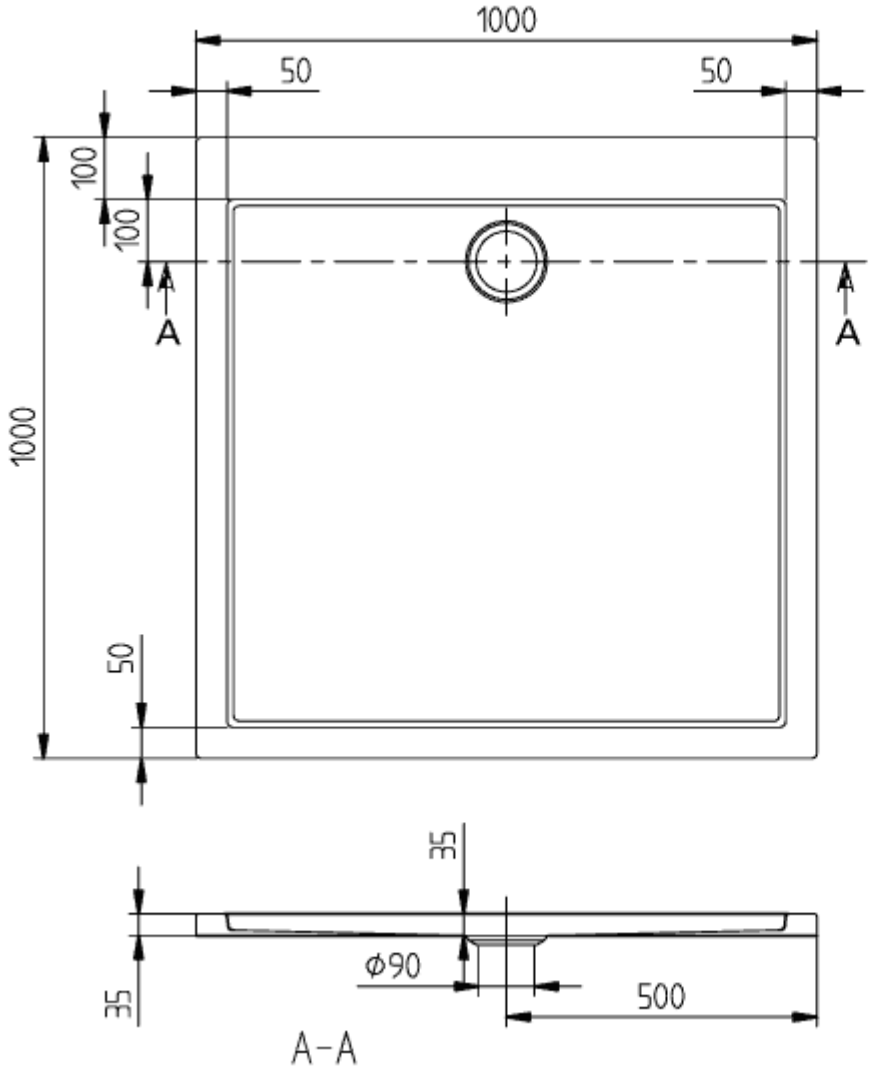

SUBWAY 1000x1000 UDA1035SUB1	Vi
V02 / 31-03-2021	
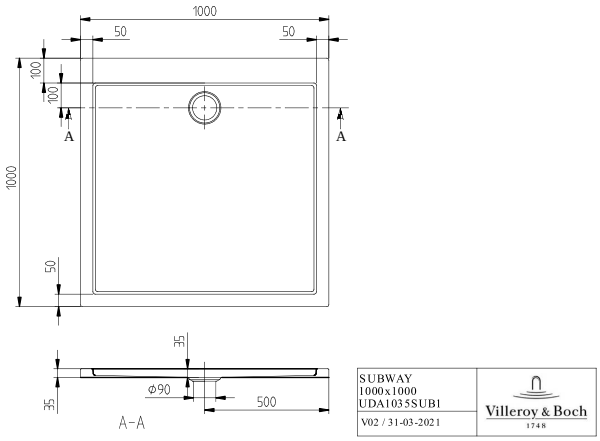
UDA1035SUB1V-01