ARCHITECTURA RECTANGULAR SHOWER TRAY RECTANGLE

PRODUCT INFORMATION

Article title	Villeroy & Boch Architectura Rectangular shower tray, 1400 x 750 x 48 mm, White Alpin
Article number	UDA1475ARA248V-01
Assembly / Assembly type	Surface-mounted, Corner installation|flush-fitting installation| Installation on a base
Assembly instructions	The installation height of the shower tray can be reduced by 30 mm if the Viega outlet fitting art. no. 634 100 is used. Please note: this outlet fitting does not conform to EN 274., From size 1400 x 900, two supports (U82990000) are required.
Scope of delivery	1 x rectangular shower tray , 1 x outlet cover in White Alpine (01), for matt colours, outlet cover in matching matt colours.
Length in mm	1400
Width in mm	750
Height in mm	48
Interior depth	14
Collection	Architectura
Material	Acrylic
Colour name	White Alpin
Other material	Outlet cover: Acrylic
Other surfaces	Outlet cover: glossy
Shape	Rectangle
Colour designation	White Alpin
Other colour designations	Outlet cover: White Alpin
Antibacterial surface (with AntiBac)	No
Easy surface cleaning (CeramicPlus)	No
With slip resistance	No

TECHNICAL DRAWINGS

UDA1475ARA248V-01

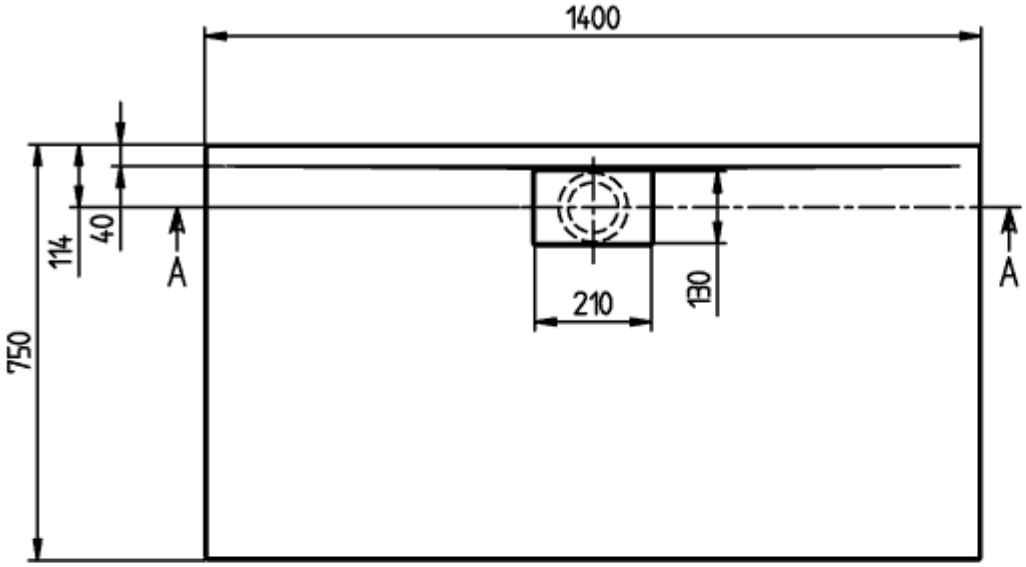

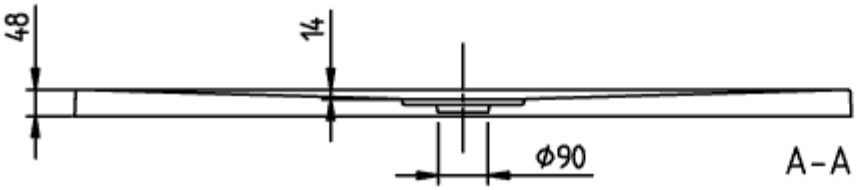

ARCHITECTURA
RIM 1400x750
UDA1475ARA248
V02 / 31-03-2021

UDA1475ARA248V-01

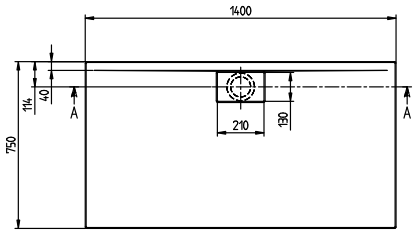

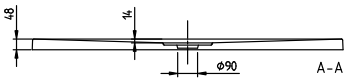

ARCHITECTURA METAL RIM 1400x750 UDA1475ARA248	Villeroy & Boch 1748
V02 / 31-03-2021	