ARCHITECTURA SQUARE SHOWER TRAY SQUARE

PRODUCT INFORMATION

Article title	Villeroy & Boch Architectura Square shower tray, 800 x 800 x 48 mm, Grey
Article number	UDA8080ARA148V-3S
Assembly / Assembly type	Surface-mounted, Corner installation|flush-fitting installation| Installation on a base
Assembly instructions	The installation height of the shower tray can be reduced by 30 mm if the Viega outlet fitting art. no. 634 100 is used. Please note: this outlet fitting does not conform to EN 274.
Scope of delivery	1 x square shower tray , 1 x outlet cover in White Alpine (01), for matt colours, outlet cover in matching matt colours.
Length in mm	800
Width in mm	800
Height in mm	48
Interior depth	15
Collection	Architectura
Material	Acrylic
Colour name	Grey
Other material	Outlet cover: Acrylic
Other surfaces	Outlet cover: matt
Shape	Square
Colour designation	Grey
Other colour designations	Outlet cover: Grey
Antibacterial surface (with AntiBac)	No
Easy surface cleaning (CeramicPlus)	No
With slip resistance	No

TECHNICAL DRAWINGS

UDA8080ARA148V-3S

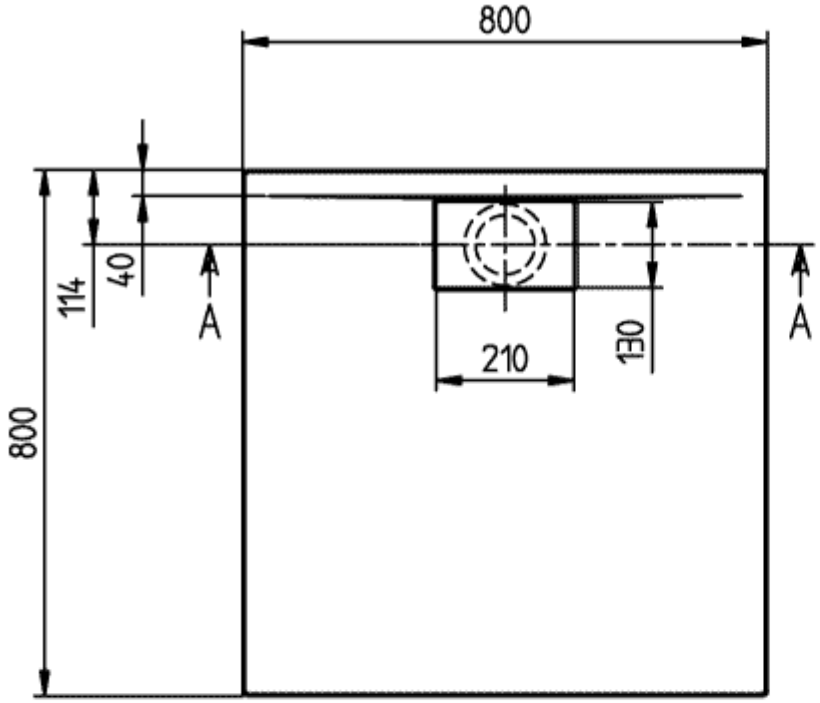

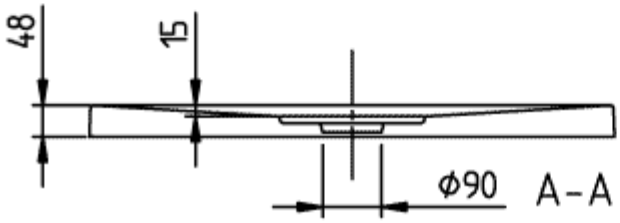

ARCHITECTURA METAL
RIM 800x800
UDA8080ARA148

V02 / 31-03-2021

Vil

UDA8080ARA148V-3S

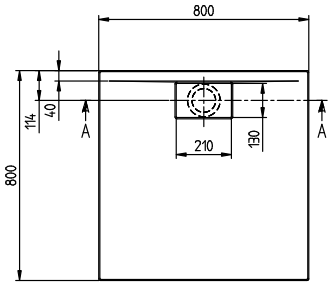

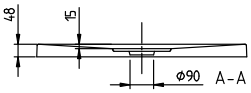

ARCHITECTURA METAL RIM 800x800 UDA8080ARA148	Villeroy & Boch 1748
V02 / 31-03-2021	