# FUTURION FLAT RECTANGULAR SHOWER TRAY RECTANGLE

## PRODUCT INFORMATION

| | |
|---|---|
| Article title | Villeroy & Boch Futurion Flat Rectangular shower tray, 1400 x 900 x 25 mm, White Alpin |
| Article number | UDQ1490FFL2V-01 |
| Assembly / Assembly type | Surface-mounted, Corner installation\|flush-fitting installation\| Installation on a base |
| Scope of delivery | 1 x rectangular shower tray |
| Length in mm | 1400 |
| Width in mm | 900 |
| Height in mm | 25 |
| Interior depth | 25 |
| Collection | Futurion Flat |
| Material | Quaryl® |
| Colour name | White Alpin |
| Shape | Rectangle |
| Colour designation | White Alpin |
| Antibacterial surface (with AntiBac) | No |
| Easy surface cleaning (CeramicPlus) | No |
| With slip resistance | No |

## TECHNICAL DRAWINGS

**UDQ1490FFL2V-01**

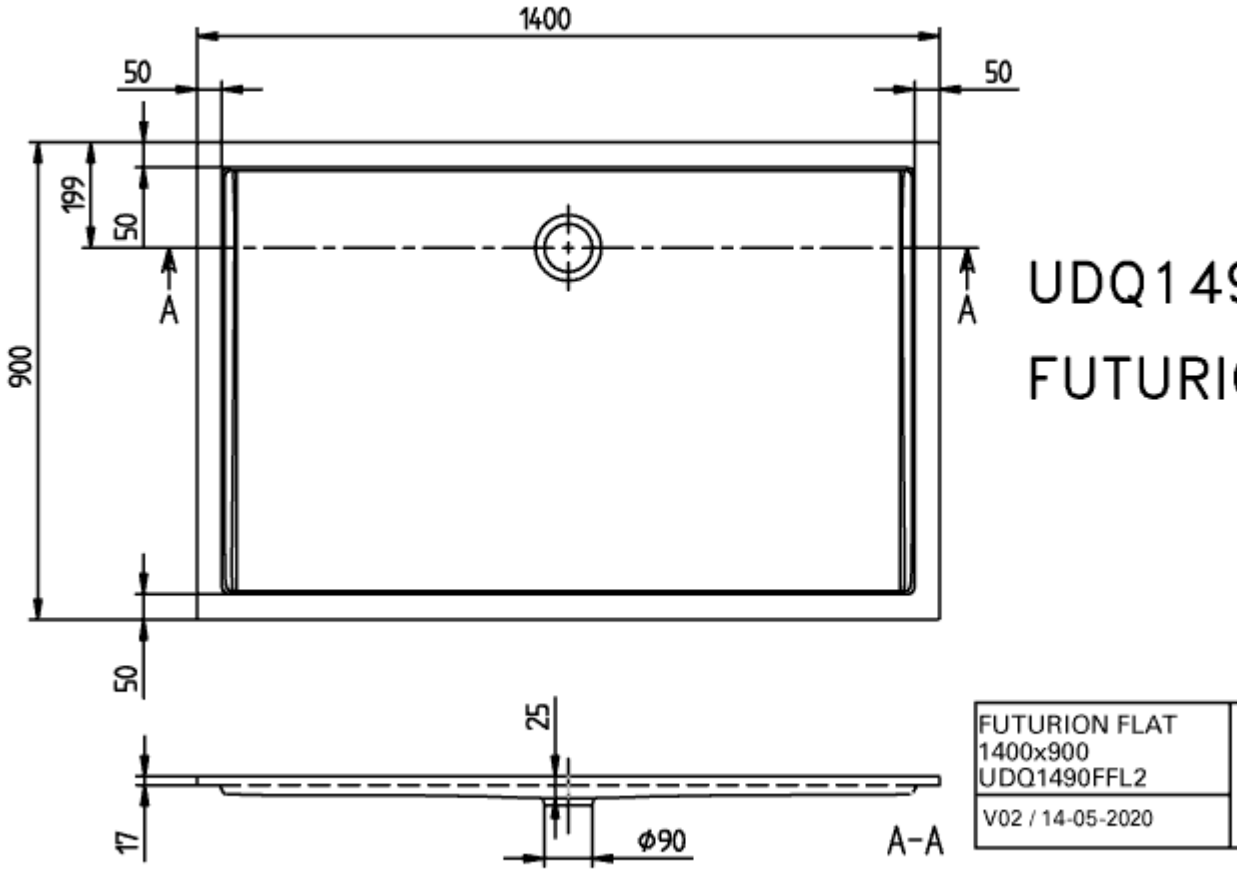
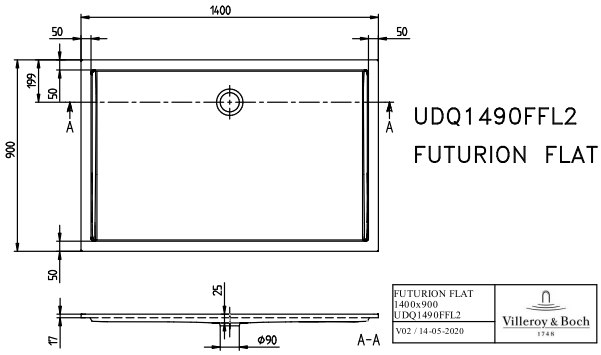
# UDQ1490FFL2V-01