SQUARO INFINITY RECTANGULAR SHOWER TRAY RECTANGLE

PRODUCT INFORMATION

Article title	Villeroy & Boch Squaro Infinity Rectangular shower tray, 1500 x 700 x 40 mm, anthracite
Article number	UDQ1570SQI2IV-1S
Assembly / Assembly type	Surface-mounted, flush-fitting installation
Assembly instructions	Quaryl shower trays can be cut to size on site in accordance with the installation instructions; see pro.villeroy-boch for a detailed video.
Scope of delivery	1 x rectangular shower tray , 1 x outlet cover in matching matt colour with chrome-plated strip
Length in mm	1500
Width in mm	700
Height in mm	40
Interior depth	15
Collection	Squaro Infinity
Material	Quaryl®
Colour name	anthracite
Other material	Outlet cover: Acrylic
Other surfaces	Outlet cover: matt
Design Awards	iF Product Design Award 2016
Shape	Rectangle
Colour designation	anthracite
Other colour designations	Outlet cover: anthracite
Antibacterial surface (with AntiBac)	No
Easy surface cleaning (CeramicPlus)	No
With slip resistance	No

TECHNICAL DRAWINGS

UDQ1570SQI2IV-1S

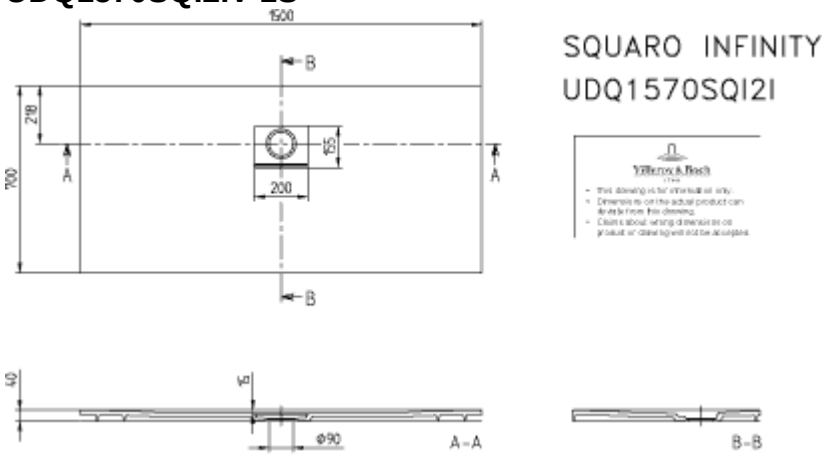
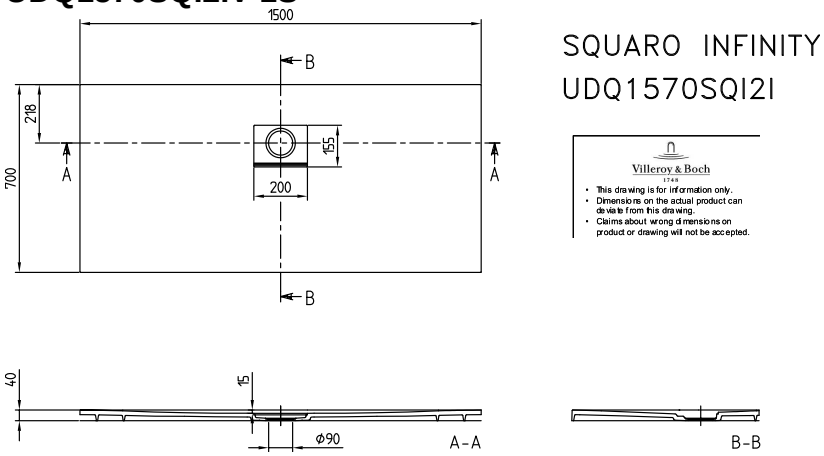
UDQ1570SQI2IV-1S