FUTURION FLAT RECTANGULAR SHOWER TRAY RECTANGLE

PRODUCT INFORMATION

Article title	Villeroy & Boch Futurion Flat Rectangular shower tray, 1800 x 900 x 25 mm, White Alpin
Article number	UDQ1890FFL2V-01
Assembly / Assembly type	Surface-mounted, Corner installation|flush-fitting installation| Installation on a base
Scope of delivery	1 x rectangular shower tray
Length in mm	1800
Width in mm	900
Height in mm	25
Interior depth	25
Collection	Futurion Flat
Material	Quaryl®
Colour name	White Alpin
Shape	Rectangle
Colour designation	White Alpin
Antibacterial surface (with AntiBac)	No
Easy surface cleaning (CeramicPlus)	No
With slip resistance	No

TECHNICAL DRAWINGS

UDQ1890FFL2V-01

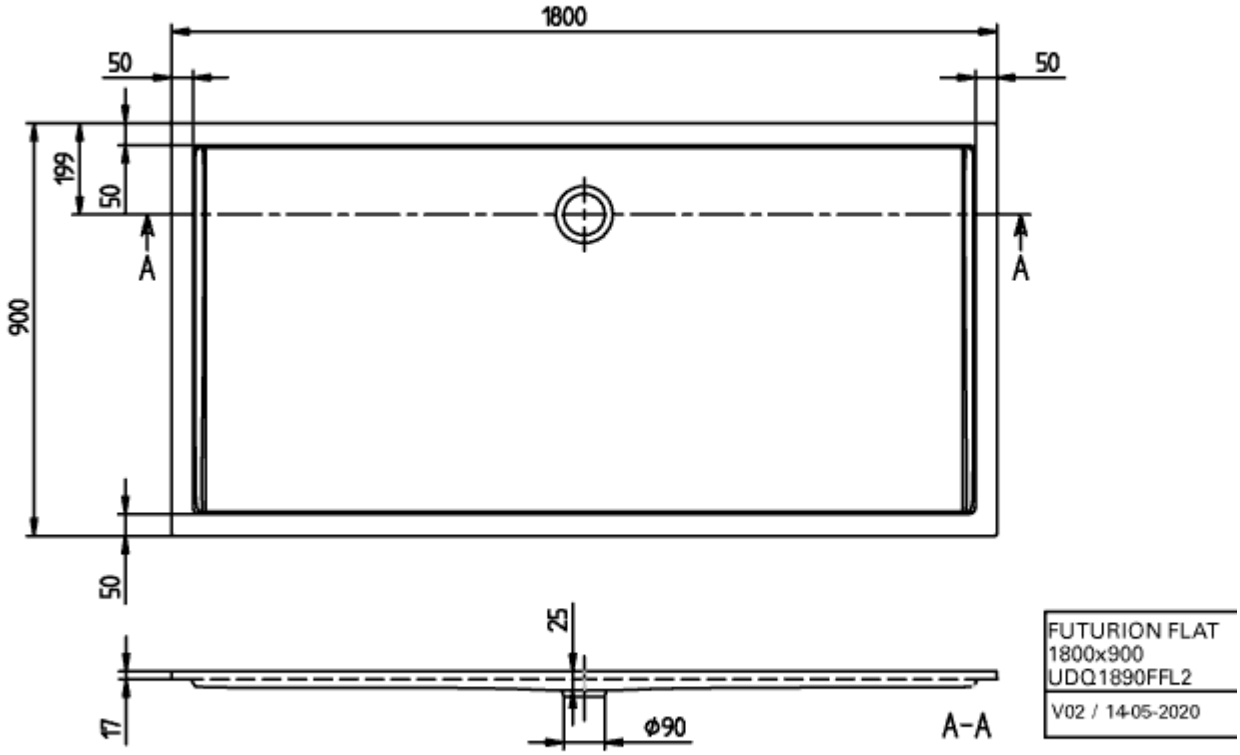
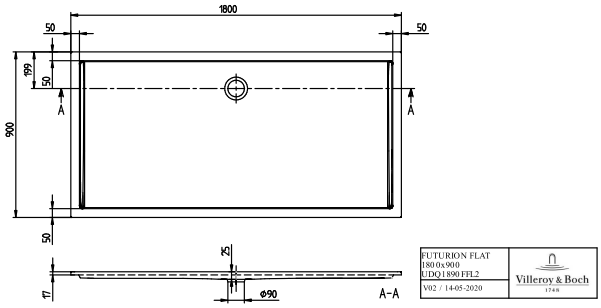
UDQ1890FFL2V-01