VICLEAN WATER CONNECTION SET

PRODUCT INFORMATION

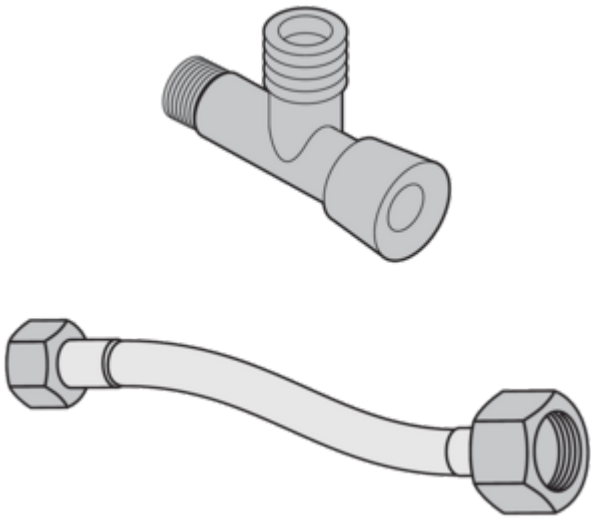

Article title	Villeroy & Boch ViClean Water connection set, 110 x 238 x 24,5 mm
Article number	V9901900
Scope of delivery	1 x corner valve 1/2" x 3/8" , 1 x water connection hose 1/2" x 3/8", 300 mm long
Depth in mm	238
Width in mm	110
Height in mm	24,5
Collection	ViClean
Material	Stainless steel