SUBWAY 2.0 WASHBASIN RECTANGLE

PRODUCT INFORMATION

Article title	Villeroy & Boch Subway 2.0 Washbasin, 550 x 440 x 150 mm, White Alpin, with overflow
Article number	7113F501
Assembly / Assembly type	wall-mounted
Assembly instructions	for installation with furniture Subway 2.0
Scope of delivery	1 x washbasin
Depth in mm	440
Width in mm	550
Height in mm	150
Interior depth	100
Collection	Subway 2.0
Suitable for	3-hole mixer, Matching Villeroy&Boch furniture
Material	Sanitary ceramics
surface	glossy
Colour name	White Alpin
With overflow	Yes
Shape	Rectangle
Colour designation	White Alpin
Antibacterial surface (with AntiBac)	No
Easy surface cleaning (CeramicPlus)	No
Number of tap holes punched through	1
Number of tap holes pre-drilled	2
Number of bowls	1

TECHNICAL DRAWINGS

7113F501

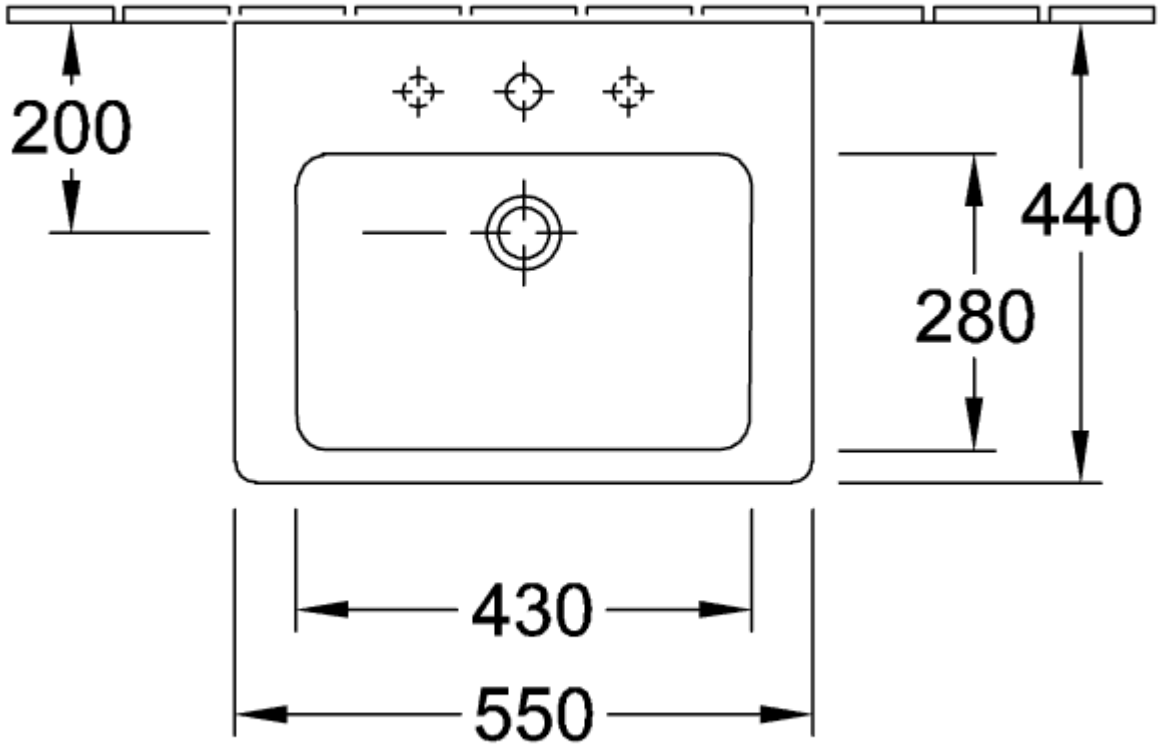
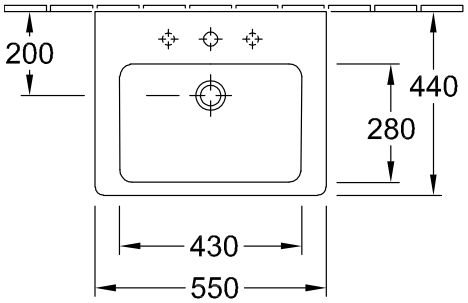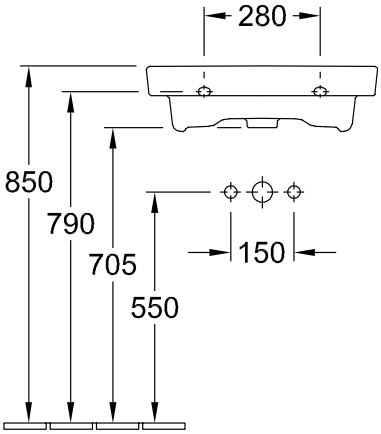
7113F501