VENTICELLO VANITY WASHBASIN RECTANGLE

PRODUCT INFORMATION

Article title	Villeroy & Boch Venticello Vanity washbasin, 800 x 500 x 165 mm, Stone White CeramicPlus, with overflow
Article number	41048JRW
Assembly / Assembly type	wall-mounted
Scope of delivery	1 x vanity washbasin
Depth in mm	500
Width in mm	800
Height in mm	165
Interior depth	120
Collection	Venticello
Tap fitting / Tap hole information	when using a wall-mounted tap fitting, we recommend a projection of at least 210 mm
Suitable for	Wall-mounted tap fittings, Matching Villeroy&Boch furniture
Material	Sanitary ceramics
surface	matt
Colour name	Stone White CeramicPlus
With overflow	Yes
Shape	Rectangle
Colour designation	Stone White
Antibacterial surface (with AntiBac)	No
Easy surface cleaning (CeramicPlus)	Yes
Number of bowls	1

TECHNICAL DRAWINGS

41048JRW

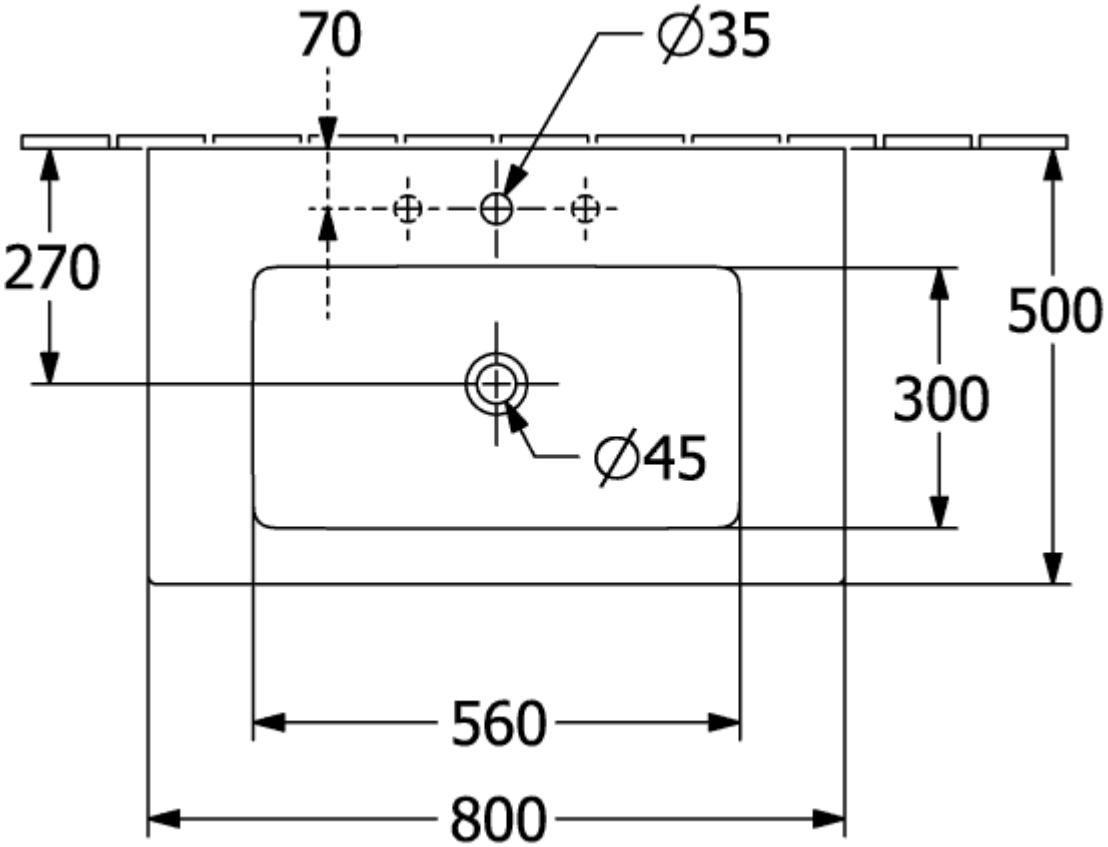
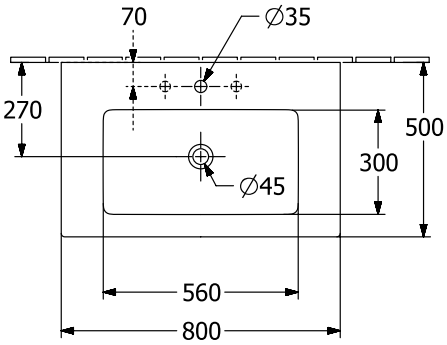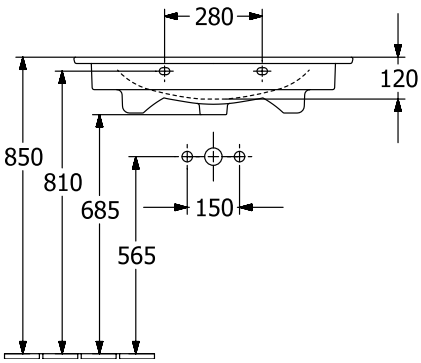
41048JRW