AVENTO WASHBASIN RECTANGLE

PRODUCT INFORMATION

Article title	Villeroy & Boch Avento Washbasin, 650 x 470 x 180 mm, White Alpin, with overflow
Article number	41586501
Assembly / Assembly type	wall-mounted
Scope of delivery	1 x washbasin
Depth in mm	470
Width in mm	650
Height in mm	180
Interior depth	110
Collection	Avento
Suitable for	3-hole mixer, Matching Villeroy&Boch furniture
Material	Sanitary ceramics
surface	glossy
Colour name	White Alpin
With overflow	Yes
Shape	Rectangle
Colour designation	White Alpin
Antibacterial surface (with AntiBac)	No
Easy surface cleaning (CeramicPlus)	No
Number of tap holes punched through	1
Number of tap holes pre-drilled	2
Number of bowls	1

TECHNICAL DRAWINGS

41586501

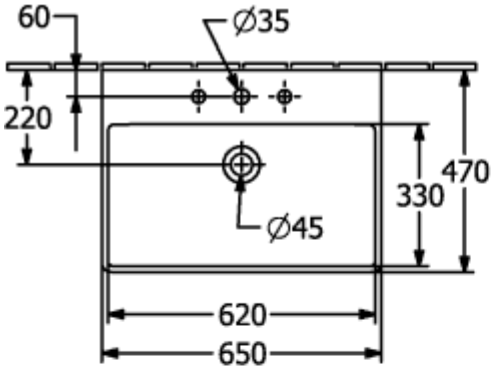

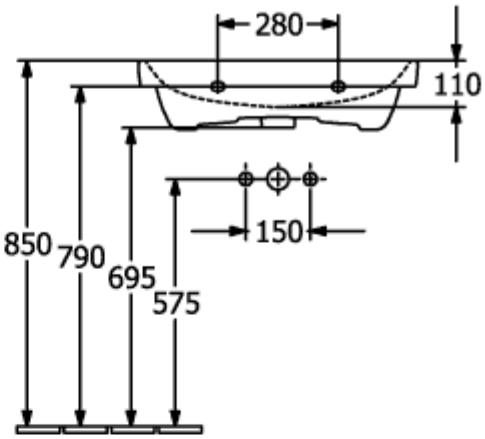

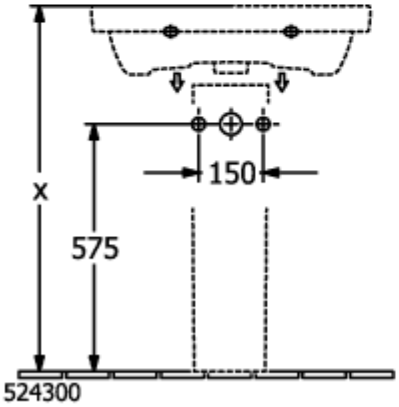

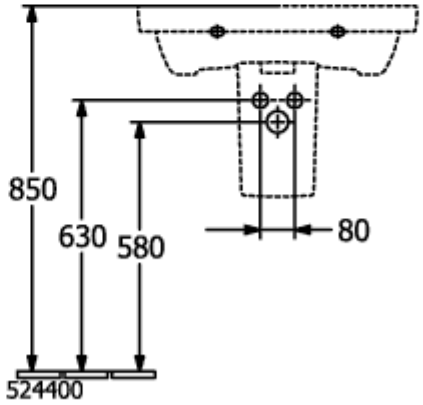
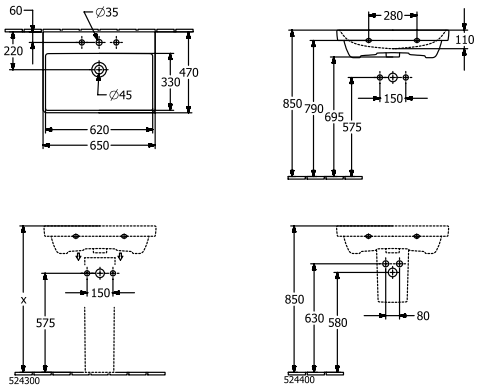
41586501