# FINION WASHDOWN TOILET, RIMLESS RECTANGLE

## PRODUCT INFORMATION

| | |
|---|---|
| Article title | Villeroy & Boch Finion Washdown toilet, rimless, wall-mounted, Stone White CeramicPlus |
| Article number | 4664R0RW |
| Assembly / Assembly type | wall-mounted |
| Assembly instructions | not suitable for installation with flush valves |
| Scope of delivery | 1 x washdown toilet, rimless , 1 x fastening set |
| Depth in mm | 560 |
| Width in mm | 375 |
| Height in mm | 350 |
| Collection | Finion |
| Suitable for | Concealed cistern |
| Innovative flushing technology (with TwistFlush) | No |
| Flush volume l | 3 / 4,5 l |
| Wall-mounted - floor-standing | wall-mounted |
| Material | Sanitary ceramics |
| surface | matt |
| Colour name | Stone White CeramicPlus |
| Design Awards | iF Product Design Award 2017 |
| Shape | Rectangle |
| Colour designation | Stone White |
| Antibacterial surface (with AntiBac) | No |
| Easy surface cleaning (CeramicPlus) | Yes |
| Rimless (mit DirectFlush) | Yes |
| Flush type | Washdown toilet |
| Integrated freshness solution (with ViFresh) | No |
| Outlet / outlet | horizontal outlet |

## TECHNICAL DRAWINGS

**4664R0RW**

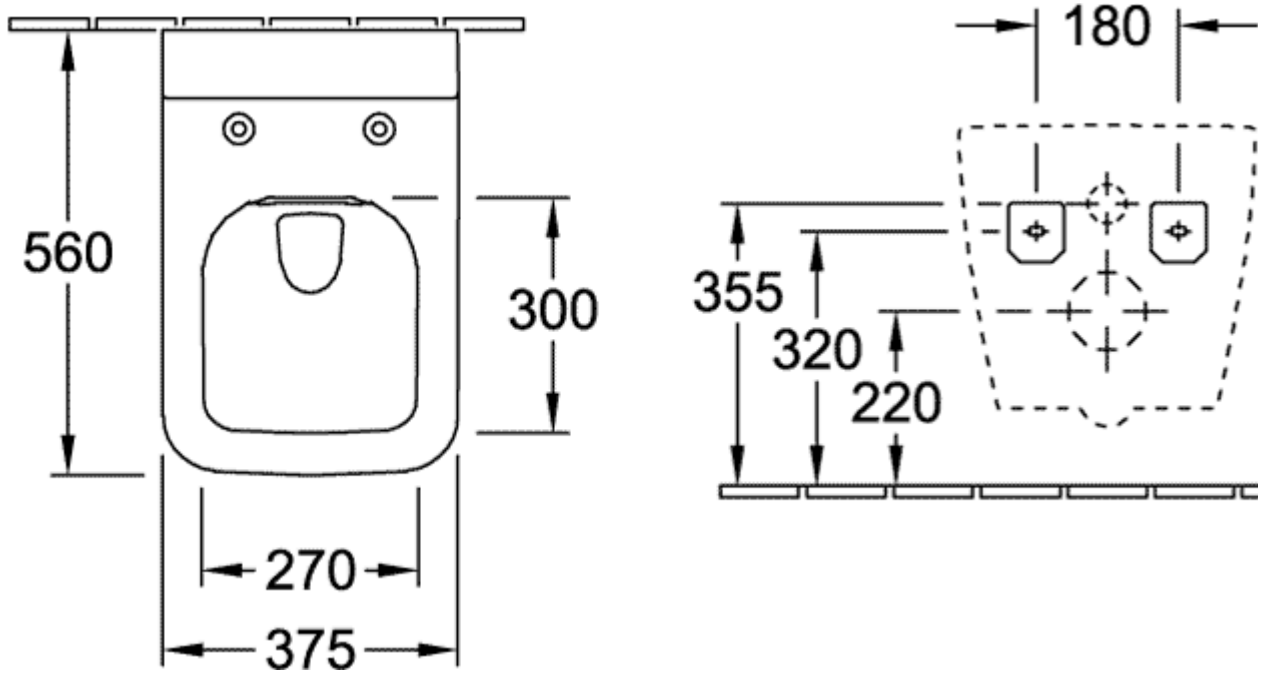

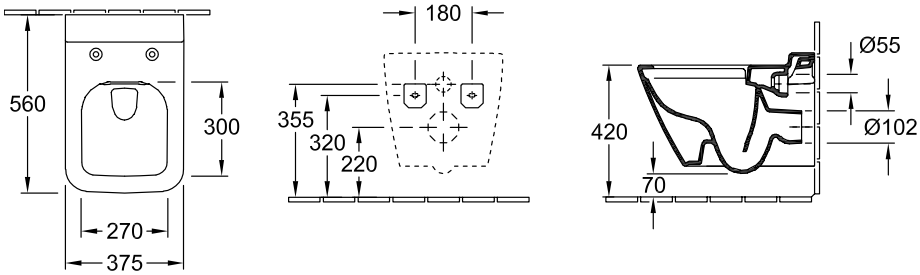
**4664R0RW**