VICARE WASHDOWN TOILET VICARE, RIMLESS OVAL

PRODUCT INFORMATION

Article title	Villeroy & Boch ViCare Washdown toilet ViCare, rimless, wall-mounted, with AntiBac, White Alpin AntiBac CeramicPlus
Article number	4695R0T2
Assembly / Assembly type	wall-mounted
Assembly instructions	not suitable for installation with flush valves
Scope of delivery	1 x washdown toilet, rimless
Depth in mm	595
Width in mm	360
Height in mm	404
Collection	ViCare
Suitable for	Concealed cistern
Innovative flushing technology (with TwistFlush)	No
Flush volume l	3 / 6 l
Wall-mounted - floor-standing	wall-mounted
Material	Sanitary ceramics
surface	glossy
Colour name	White Alpin AntiBac CeramicPlus
Shape	Oval
Colour designation	White Alpin
Antibacterial surface (with AntiBac)	Yes
Easy surface cleaning (CeramicPlus)	Yes
Rimless (mit DirectFlush)	Yes
Flush type	Washdown toilet
Integrated freshness solution (with ViFresh)	No
Outlet / outlet	horizontal outlet

TECHNICAL DRAWINGS

4695R0T2

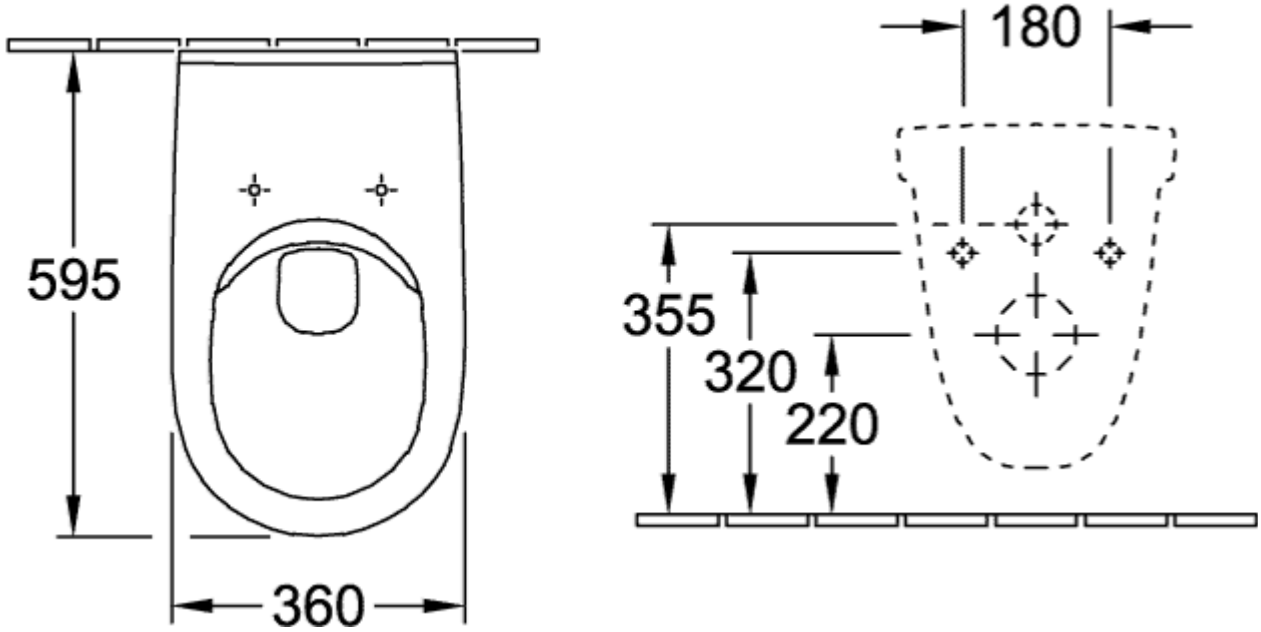
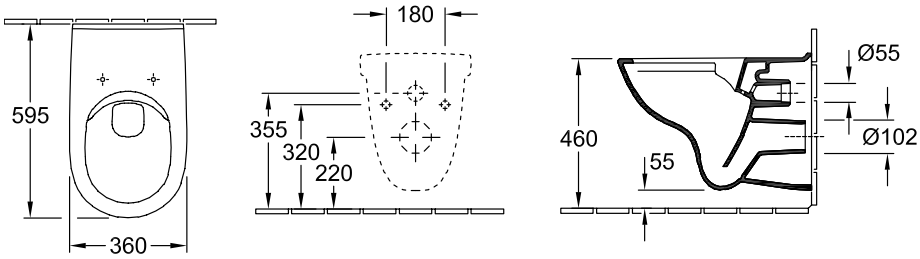
4695R0T2