MEMENTO 2.0 WASHBASIN RECTANGLE

PRODUCT INFORMATION

Article title	Villeroy & Boch Memento 2.0 Washbasin, 1000 x 470 x 135 mm, White Alpin, without overflow
Article number	4A22A101
Assembly / Assembly type	wall-mounted
Scope of delivery	1 x washbasin
Depth in mm	470
Width in mm	1000
Height in mm	135
Interior depth	95
Collection	Memento 2.0
Tap fitting / Tap hole information	A non-closing valve or the ViFlow (concealed overflow) must be used for models without overflow function.
Suitable for	two 1-hole tap fittings
Material	TitanCeram
surface	glossy
Colour name	White Alpin
With overflow	No
Shape	Rectangle
Colour designation	White Alpin
Antibacterial surface (with AntiBac)	No
Easy surface cleaning (CeramicPlus)	No
Number of tap holes punched through	2
Number of bowls	1

TECHNICAL DRAWINGS

4A22A101

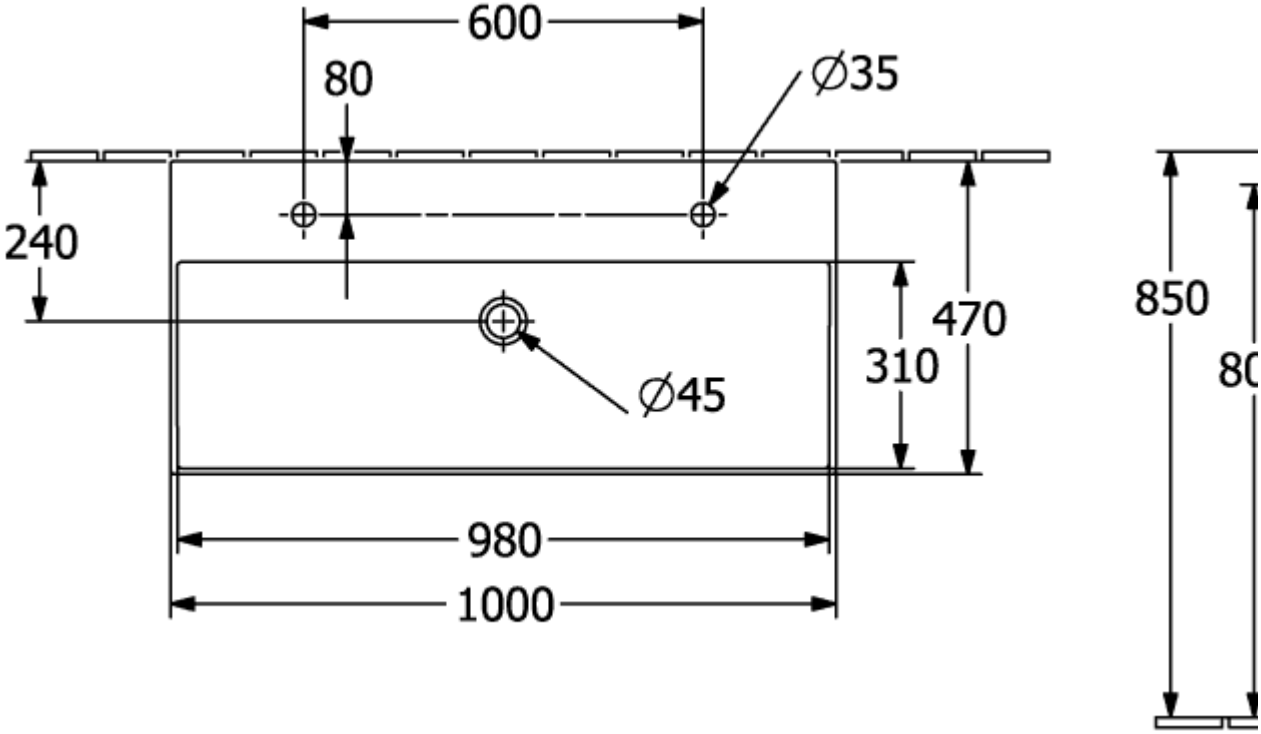
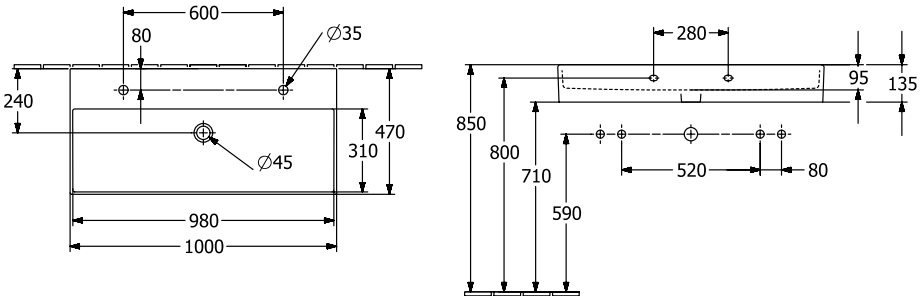
4A22A101