VENTICELLO CISTERN

PRODUCT INFORMATION

Article title	Villeroy & Boch Venticello Cistern, water inlet from the sides or rear, White Alpin
Article number	57071101
Scope of delivery	1 x cistern
Depth in mm	165
Width in mm	383
Height in mm	389
Collection	Venticello
Material	Sanitary ceramics
Colour name	White Alpin
Other material	Push button: ABS Flushing mechanism: Plastic
Other surfaces	Push button: chrome, glossy, Flushing mechanism: glossy
Colour designation	White Alpin
Other colour designations	Push button: Chrome, Flushing mechanism: White Alpin

TECHNICAL DRAWINGS

57071101

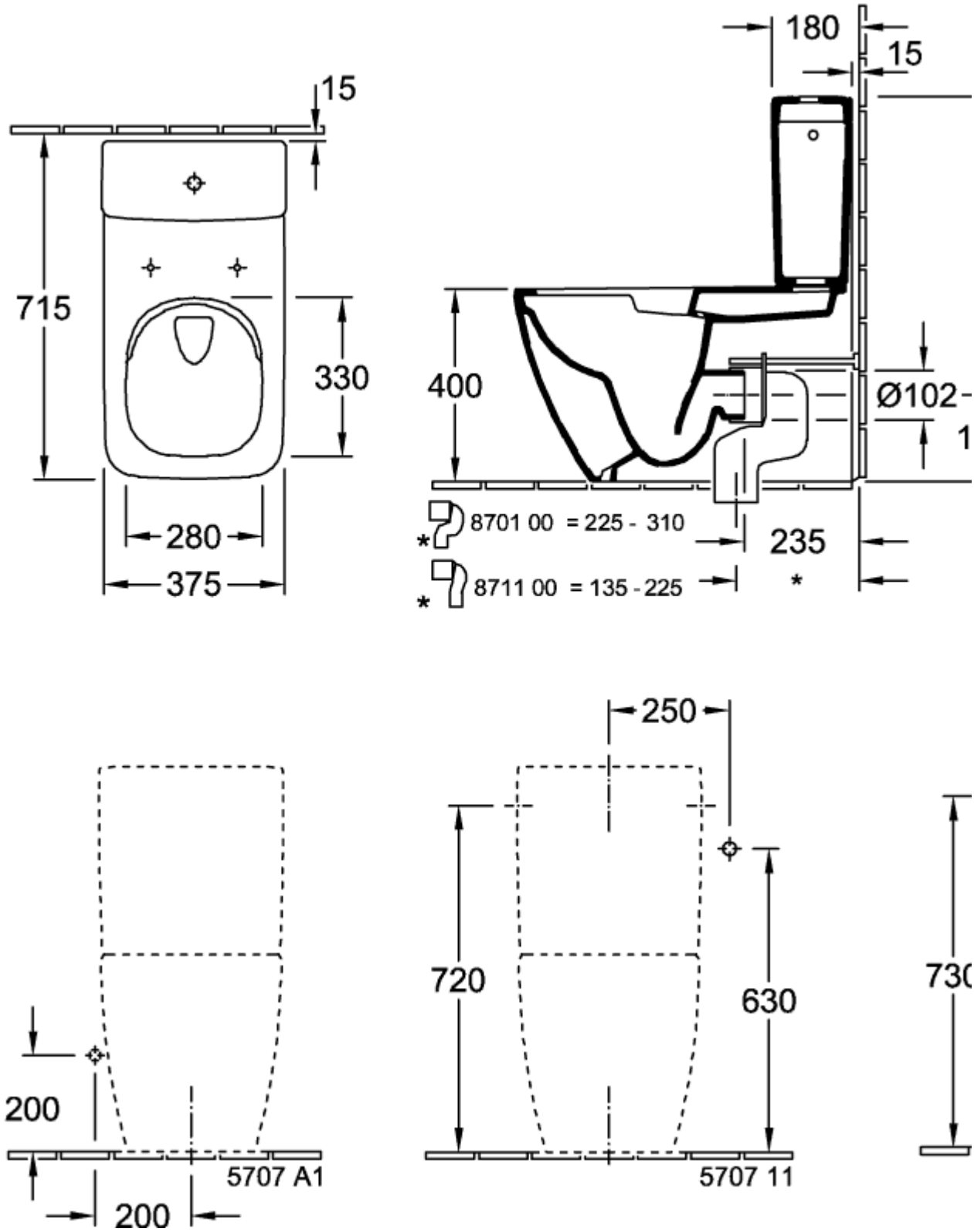
15
715
330
280
375
180
15
400
Ø102
1
8701 00 = 225 - 310
235
8711 00 = 135 - 225
*
250
720
630
730
200
200
5707 A1
5707 11

57071101

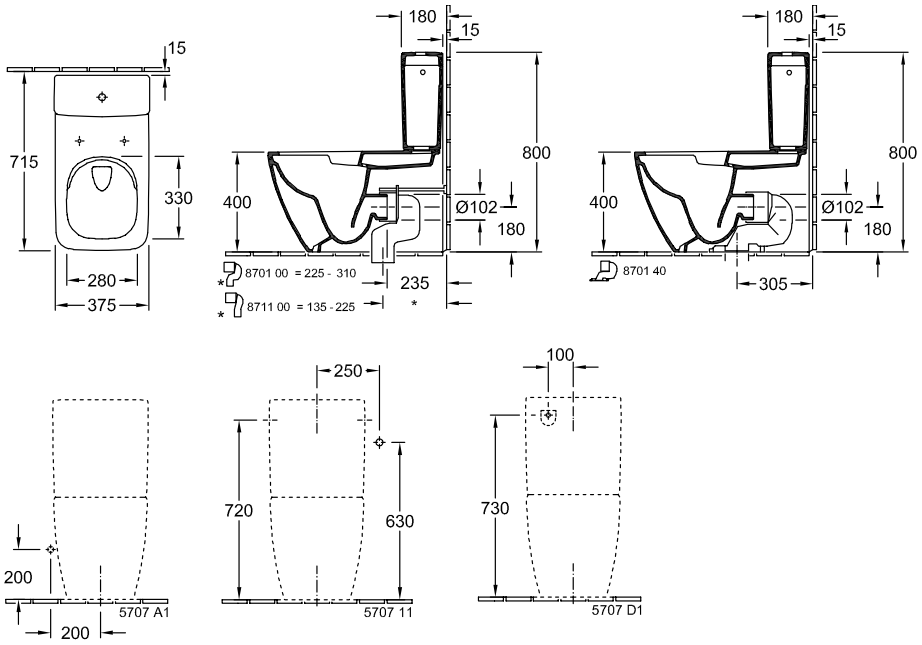
15
715
330
280
375
180
15
800
400
Ø102
180
8701 00 = 225 - 310
235
8711 00 = 135 - 225
*
180
15
800
400
Ø102
180
8701 40
305
250
720
630
5707 A1
5707 11
100
730
5707 D1
200
200