HOMMAGE BIDET OVAL

PRODUCT INFORMATION

Article title	Villeroy & Boch Hommage Bidet, floor-standing, 370 x 575 mm, White Alpin CeramicPlus
Article number	744200R1
Assembly / Assembly type	floor-standing
Assembly instructions	recommendation: to be installed from the wall at: 10 mm
Scope of delivery	1 x bidet , 1 x installation kit 1 x fastening set
Depth in mm	575
Width in mm	370
Height in mm	410
Collection	Hommage
Suitable for	3-hole mixer, precut centre tap hole
Wall-mounted - floor-standing	floor-standing
Material	Sanitary ceramics
surface	glossy
Colour name	White Alpin CeramicPlus
Shape	Oval
Colour designation	White Alpin
Antibacterial surface (with AntiBac)	No
Easy surface cleaning (CeramicPlus)	Yes

TECHNICAL DRAWINGS

744200R1

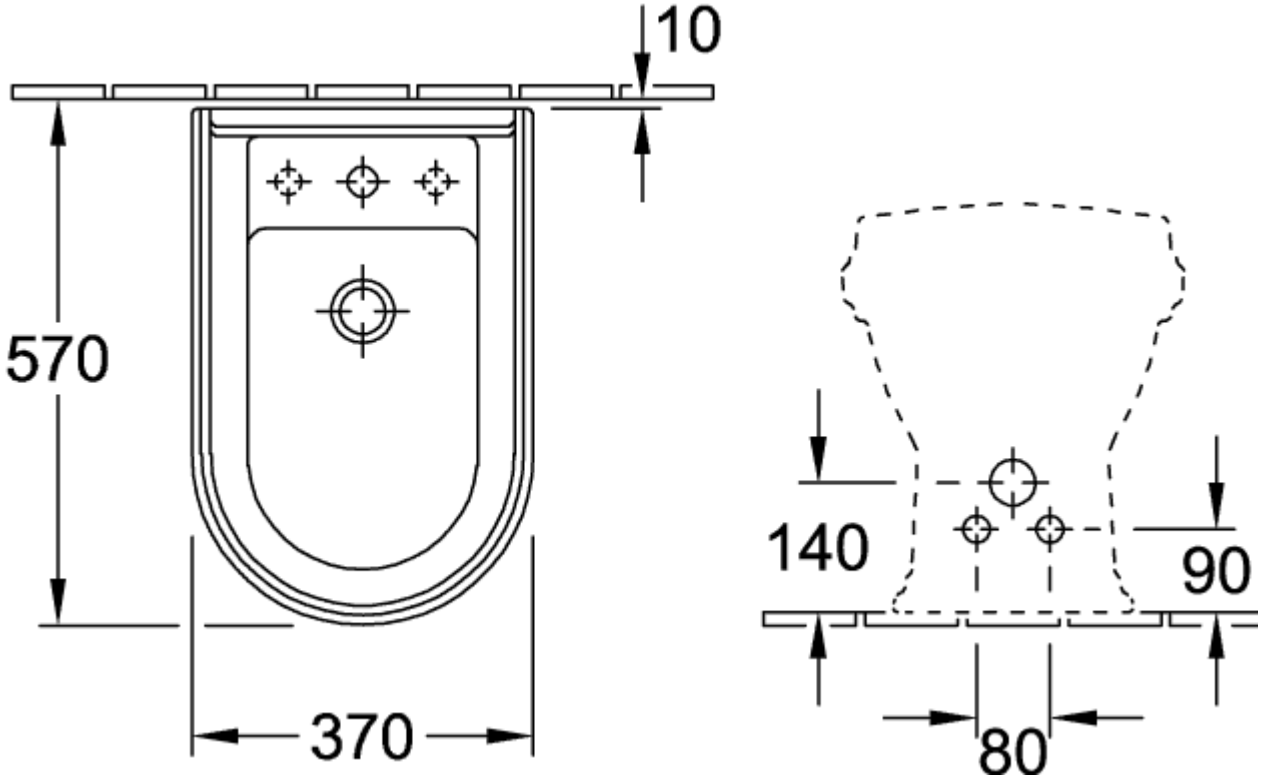
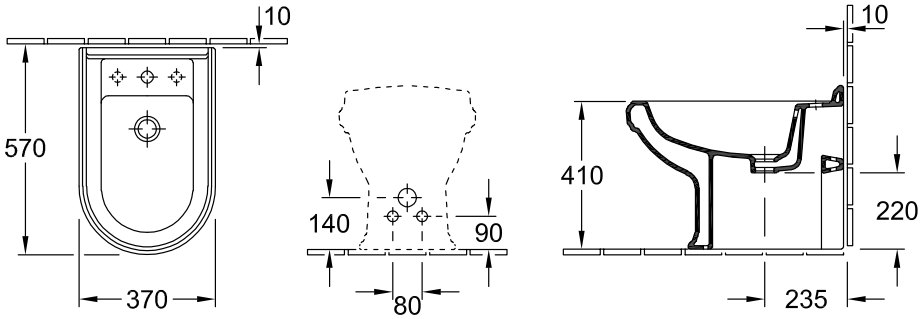
744200R1