VENTICELLO VANITY UNIT ANGULAR

PRODUCT INFORMATION

Article title	Villeroy & Boch Venticello Vanity unit, 2 pull-out compartments, 1257 x 436 x 502 mm, Glossy White / Glossy White
Article number	A94905DH
Assembly / Assembly type	wall-mounted
Type of opening	2 pull-out compartments
Equipment	2 x wide glass drawer divider , 4 x narrow glass drawer divider 2 x accessory box L 2 x pull-out compartment
Scope of delivery	1 x vanity unit , 1 x fastening set
Position of washbasin	for 2 washbasins
Furniture with tap hole	Tap hole pre-drilled at the factory
Depth in mm	502
Width in mm	1257
Height in mm	436
Depth with handle mm	502
Depth without handle mm	477
Collection	Venticello
Suitable for	selected surface-mounted washbasins
Function	with SoftClosing
Material front	MDF
Surface of front	Film
Material body	MDF
Surface of body	Film
Material cover panel	MDF
Other material	Handle: aluminium
Other surfaces	Handle: Copper, glossy
Shape	Angular
Colour designation	Glossy White
Colour designation of cover panel	Glossy White
Other colour designations	Handle: Copper
With lighting	No
Smart home compatible	No

TECHNICAL DRAWINGS

A94905DH

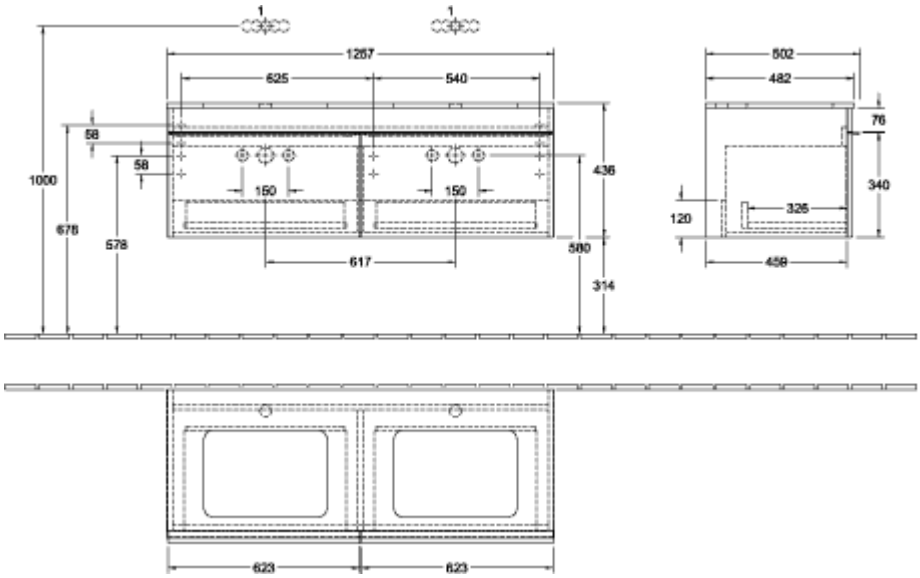
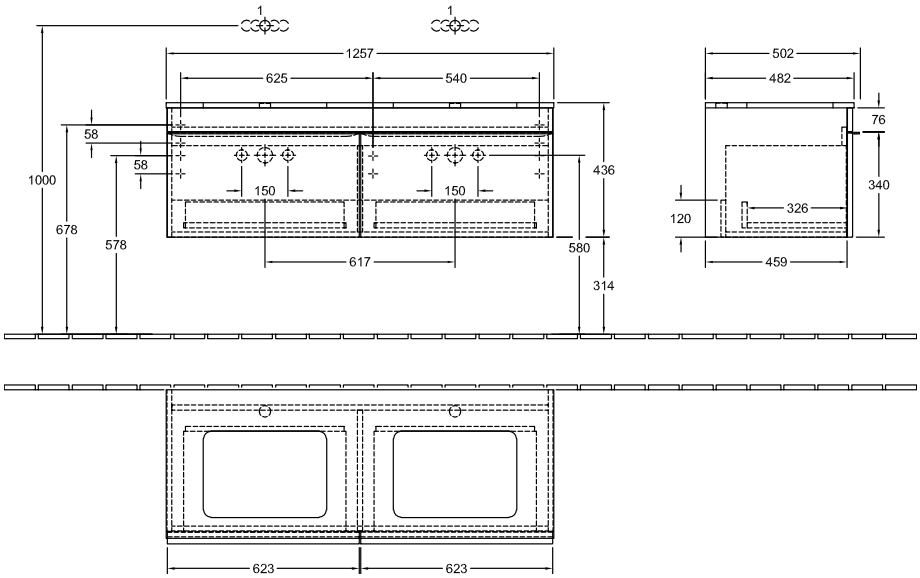
A94905DH