FINION VANITY UNIT ANGULAR

PRODUCT INFORMATION

Article title	Villeroy & Boch Finion Vanity unit, 4 pull-out compartments, 1200 x 603 x 501 mm, Olive Matt Lacquer / Glass White Matt
Article number	F38100GM
Assembly / Assembly type	wall-mounted
Type of opening	4 pull-out compartments
Equipment	2 x wide glass drawer divider , 6 x narrow glass drawer divider 2 x accessory box S 2 x accessory box M 4 x pull-out compartment with non-slip mat
Scope of delivery	1 x vanity unit , 1 x fastening set
Position of washbasin	washbasin on the middle
Position of shelf unit	without
Depth in mm	501
Width in mm	1200
Height in mm	603
Collection	Finion
Suitable for	selected surface-mounted washbasins
Function	• with SoftClosing • with push-to-open function
Material front	MDF
Surface of front	Paint
Material body	MDF
Surface of body	Paint
Material cover panel	MDF
Shape	Angular
Colour designation	Olive Matt Lacquer
Colour designation of cover panel	Glass White Matt
With lighting	No
Smart home compatible	No

TECHNICAL DRAWINGS

F38100GM

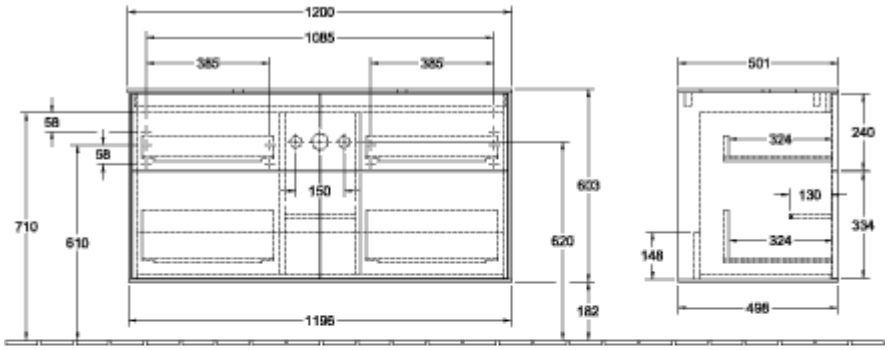

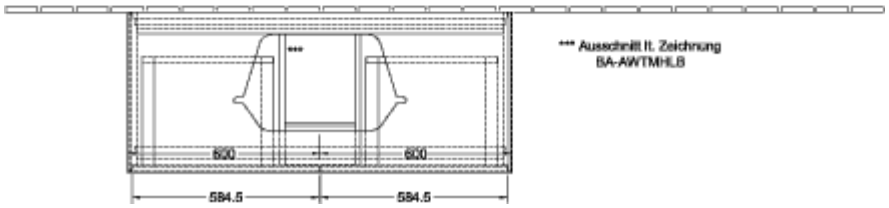
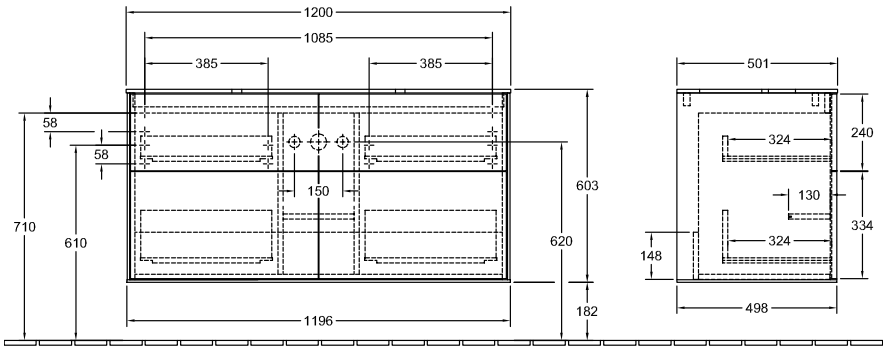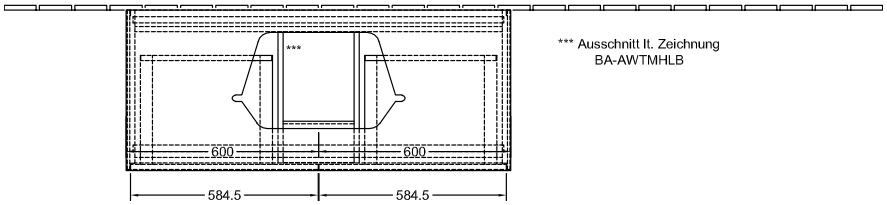
F38100GM