ACCESSORIES TEMPOPLEX PLUS OUTLET

PRODUCT INFORMATION

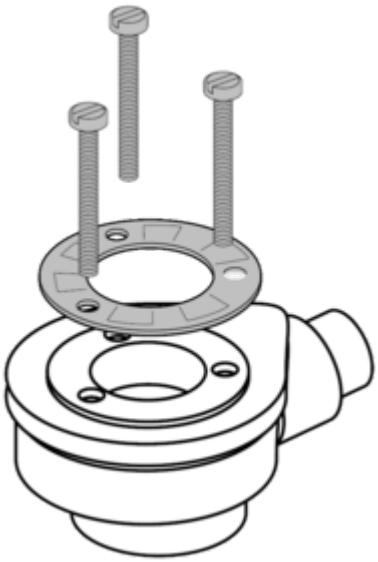

Article title	Villeroy & Boch Accessories Tempoplex Plus outlet, 140 x 270 x 140 mm
Article number	U90881299
Scope of delivery	1 x outlet
Depth in mm	270
Width in mm	140
Height in mm	140
Collection	Accessories