LOOP & FRIENDS RECTANGULAR BATH RECTANGLE

PRODUCT INFORMATION

Article title	Villeroy & Boch Loop & Friends Rectangular bath SQUARE, 1900 x 900 mm, White Alpin
Article number	UBA199LFS2V-01
Assembly / Assembly type	built-in installation
Scope of delivery	1 x rectangular bath
Length in mm	1900
Width in mm	900
Height in mm	465
Interior depth	440
Collection	Loop & Friends
Material	Acrylic
Colour name	White Alpin
With overflow	Yes
Number of people	2
Shape	Rectangle
Colour designation	White Alpin
With slip resistance	No
Outlet / outlet	central outlet
Interior form	rectangular
SilentFlow	No

TECHNICAL DRAWINGS

UBA199LFS2V-01

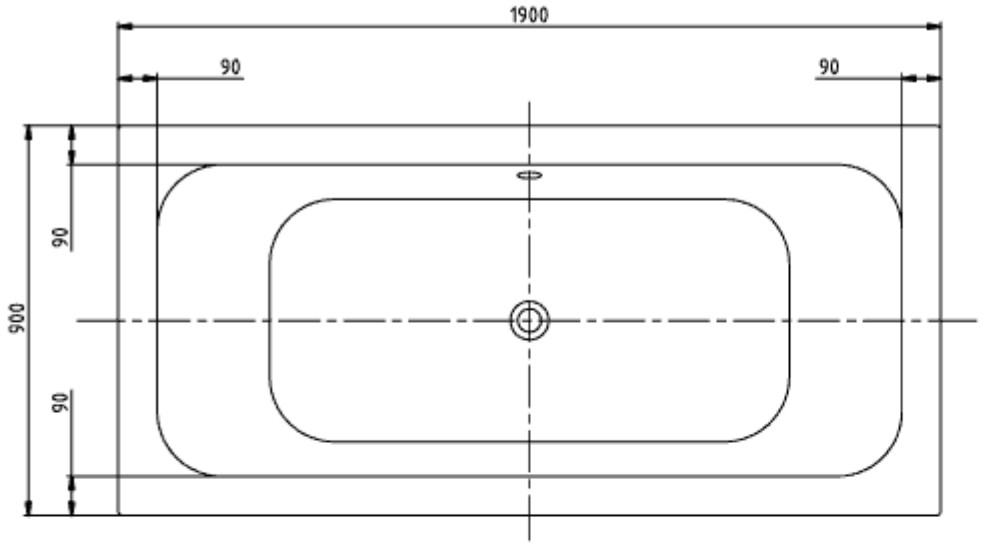

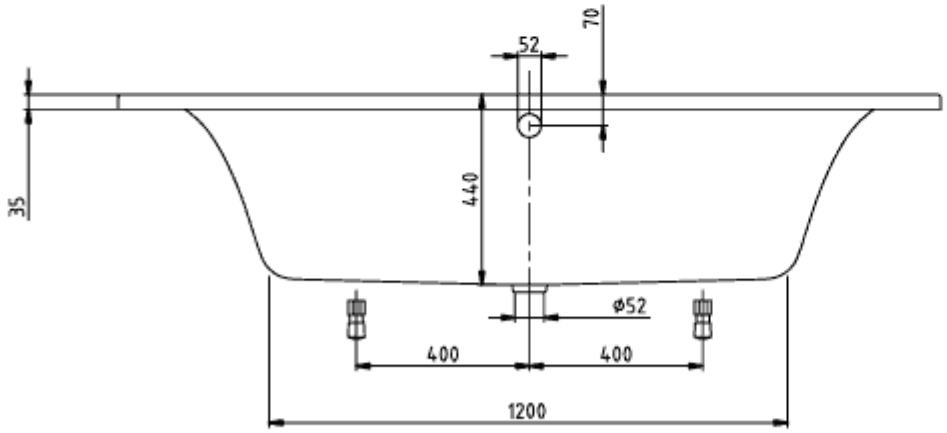

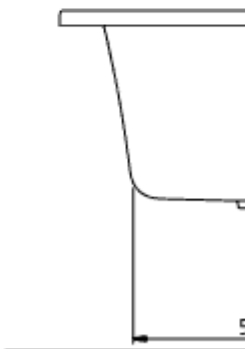

LOOP & FRIENDS
SQUARE 1900x900
UBA199LFS2

V02/ 25-02-2020
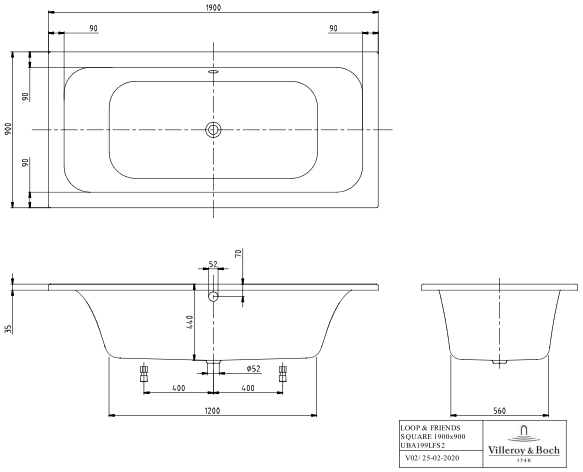
UBA199LFS2V-01