# ARCHITECTURA SQUARE SHOWER TRAY SQUARE

## PRODUCT INFORMATION

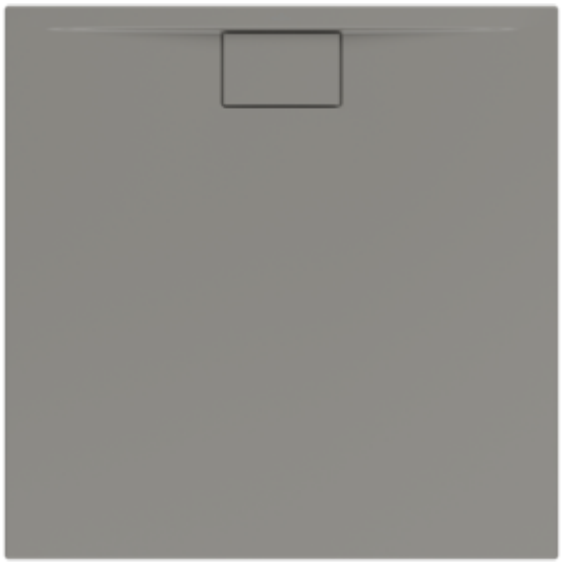

| | |
|---|---|
| Article title | Villeroy & Boch Architectura Square shower tray, 1000 x 1000 x 15 mm, Grey |
| Article number | UDA1010ARA115V-3S |
| Assembly / Assembly type | Surface-mounted, Corner installation\|flush-fitting installation\| Installation on a base |
| Assembly instructions | With MetalRim and an edge height of 15mm, we recommend the use of a composite seal in accordance with ETAG 022 on the floor structure below the shower tray in order to prevent any moisture from penetrating the floor structure., The installation height of the shower tray can be reduced by 30 mm if the Viega outlet fitting art. no. 634 100 is used. Please note: this outlet fitting does not conform to EN 274. |
| Scope of delivery | 1 x square shower tray , 1 x outlet cover in White Alpine (01), for matt colours, outlet cover in matching matt colours. |
| Length in mm | 1000 |
| Width in mm | 1000 |
| Height in mm | 15 |
| Interior depth | 19 |
| Collection | Architectura |
| Material | Acrylic |
| Colour name | Grey |
| Other material | Outlet cover: Acrylic |
| Other surfaces | Outlet cover: matt |
| Shape | Square |
| Colour designation | Grey |
| Other colour designations | Outlet cover: Grey |
| Antibacterial surface (with AntiBac) | No |
| Easy surface cleaning (CeramicPlus) | No |
| With slip resistance | No |

## TECHNICAL DRAWINGS

**UDA1010ARA115V-3S**

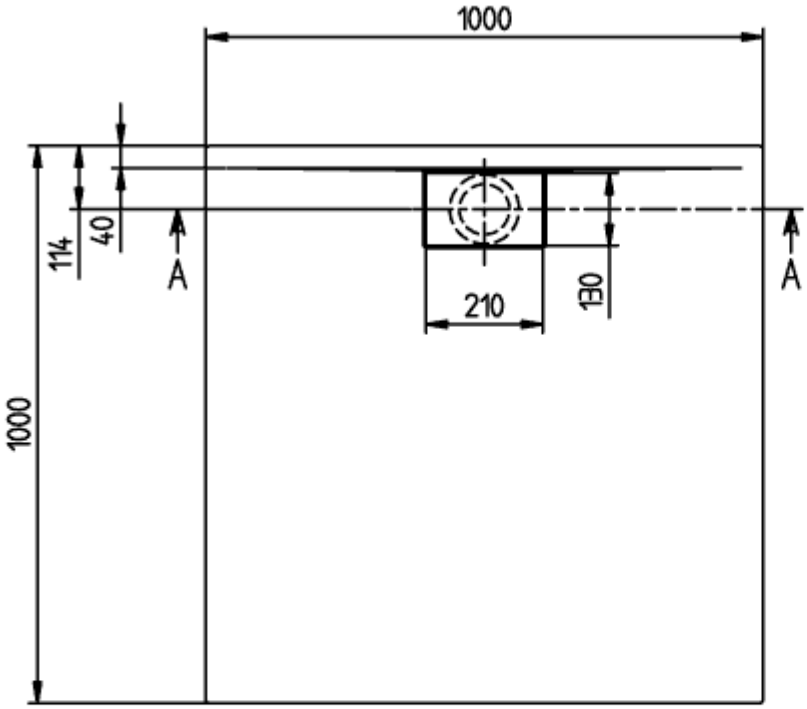


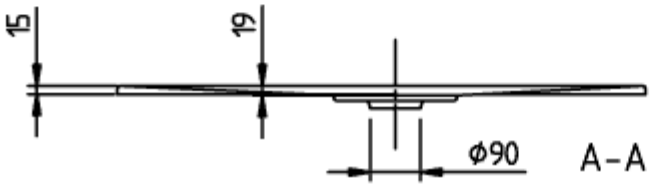


ARCHITECTURA METAL
RIM 1000x1000
UDA1010ARA115

V02 / 31-03-2021

Viller

# UDA1010ARA115V-3S

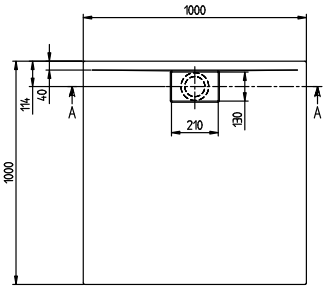


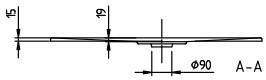


| | |
|---|---|
| ARCHITECTURA METAL<br>RIM 1000x1000<br>UDA1010ARA115 | Villeroy & Boch<br>1748 |
| V02 / 31-03-2021 | |