SUBWAY RECTANGULAR SHOWER TRAY RECTANGLE

PRODUCT INFORMATION

Article title	Villeroy & Boch Subway Rectangular shower tray, 1200 x 900 x 35 mm, White Alpin
Article number	UDA1293SUB2V-01
Assembly / Assembly type	Surface-mounted, Corner installation|flush-fitting installation| Installation on a base
Assembly instructions	The installation height of the shower tray can be reduced by 30 mm if the Viega outlet fitting art. no. 634 100 is used. Please note: this outlet fitting does not conform to EN 274., From size 1400 x 900, two supports (U82990000) are required.
Scope of delivery	1 x rectangular shower tray
Length in mm	1200
Width in mm	900
Height in mm	35
Interior depth	35
Collection	Subway
Material	Acrylic
Colour name	White Alpin
Shape	Rectangle
Colour designation	White Alpin
Antibacterial surface (with AntiBac)	No
Easy surface cleaning (CeramicPlus)	No
With slip resistance	No

TECHNICAL DRAWINGS

UDA1293SUB2V-01

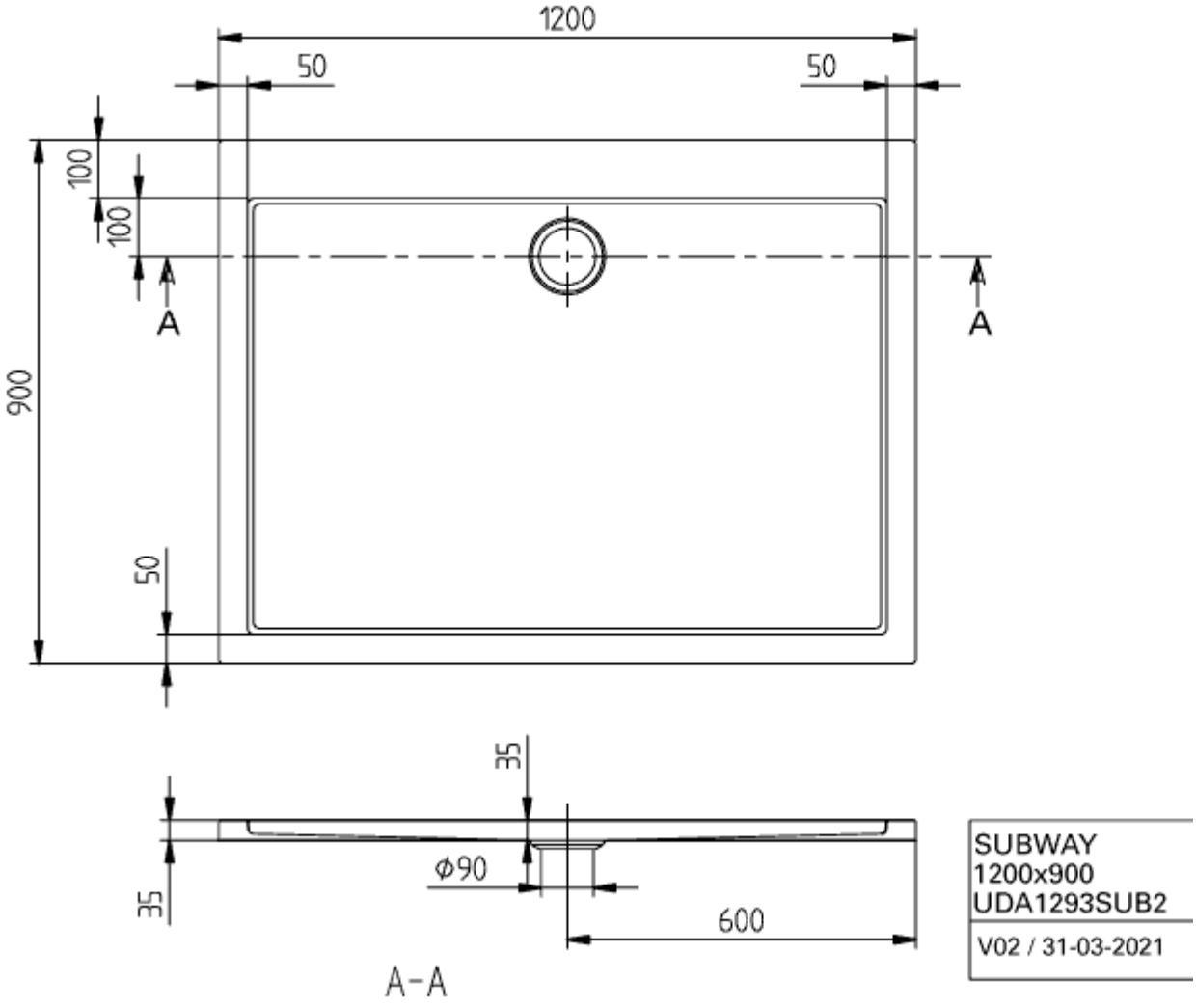
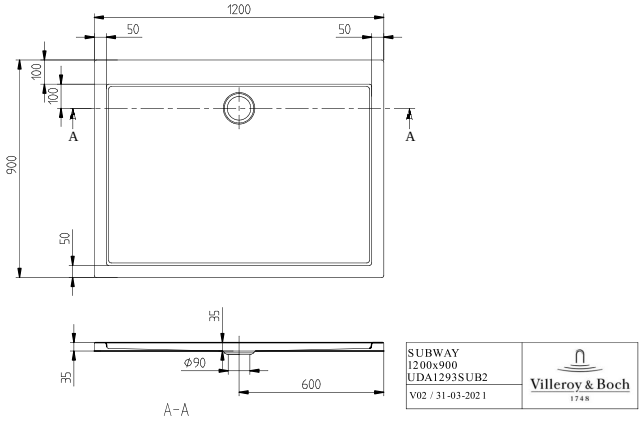
UDA1293SUB2V-01