# FARMHOUSE 90 X DOUBLE-BOWL SINK RECTANGLE

## PRODUCT INFORMATION

| | |
|---|---|
| Article title | Villeroy & Boch Farmhouse 90 X Double-bowl sink, included Waste system pop-up, of Ceramic, 900 x 550 mm, White Alpin CeramicPlus |
| Article number | 639002R1 |
| Assembly / Assembly type | surface-mounted installation |
| Assembly instructions | minimum unit width: 90 cm, The rear is unglazed and the projection is 50 cm. Overhang varies depending on the furniture manufacturer.\|installation in natural stone / artificial stone countertops recommended |
| Scope of delivery | 1 x sink , 1 x pop-up waste system 1 x cover cap, round |
| Length in mm | 550 |
| Width in mm | 900 |
| Height in mm | 220 |
| Interior depth | 200 |
| Collection | Farmhouse 90 X |
| Material | Ceramic |
| Colour name | White Alpin CeramicPlus |
| Other material | Grate: Stainless steel Valve: Stainless steel |
| Function of the drain fitting | pop-up waste system |
| Colour designation | White Alpin |
| Other colour designations | Grate: Chrome, Valve: Chrome |

## TECHNICAL DRAWINGS

**639002R1**

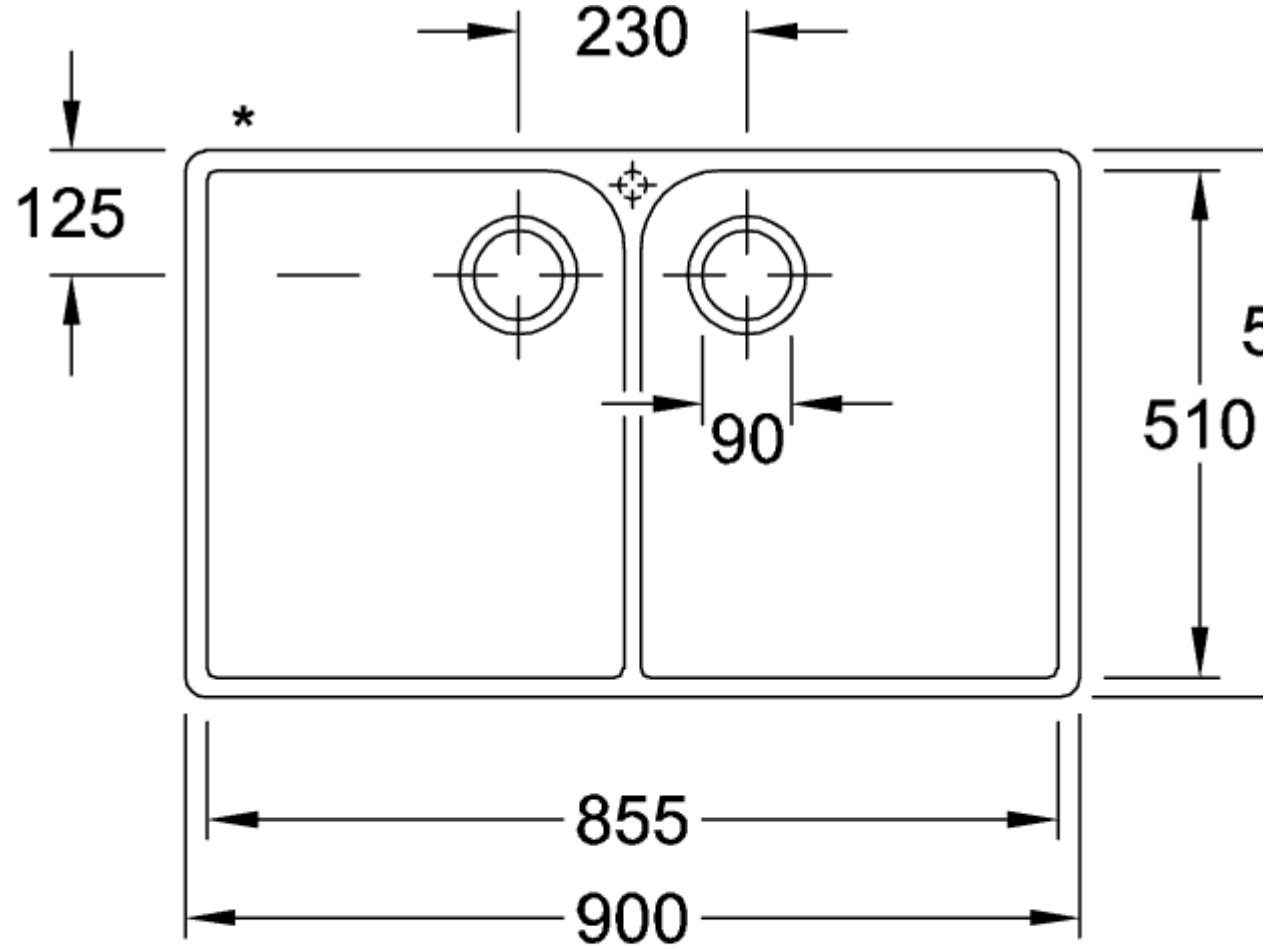


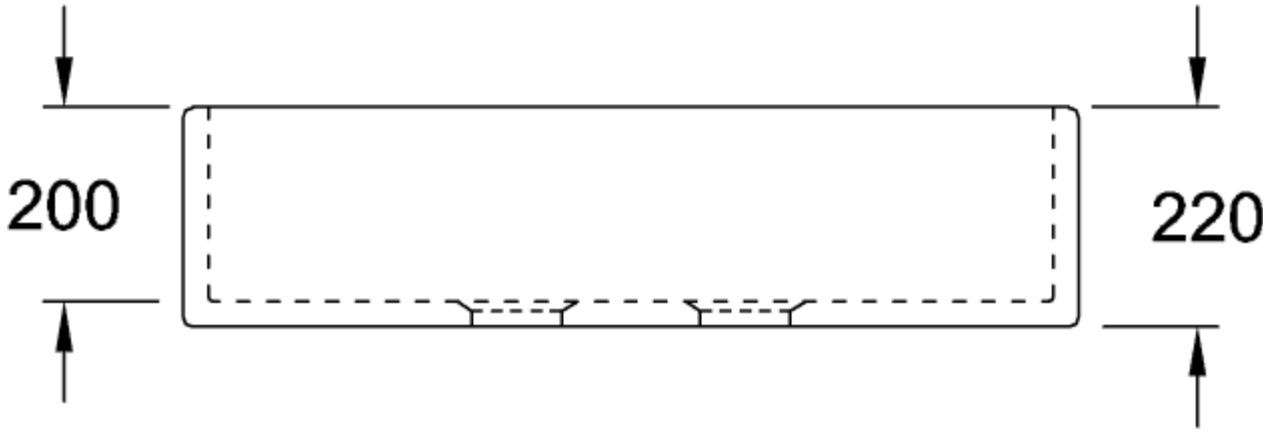
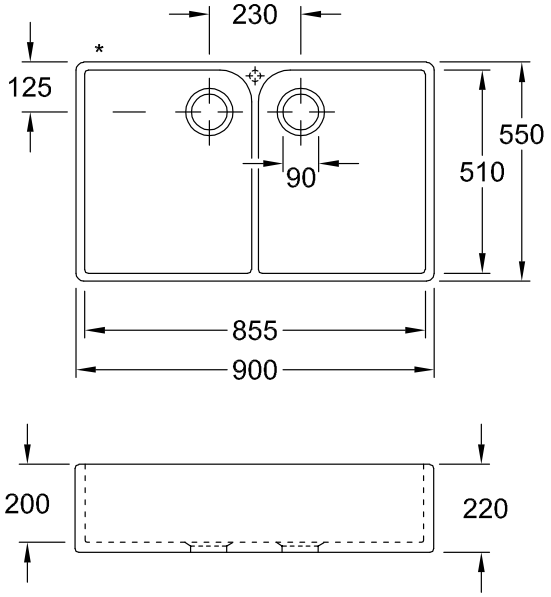
**639002R1**