SUBWAY 50 BUILT-IN SINK RECTANGLE

PRODUCT INFORMATION

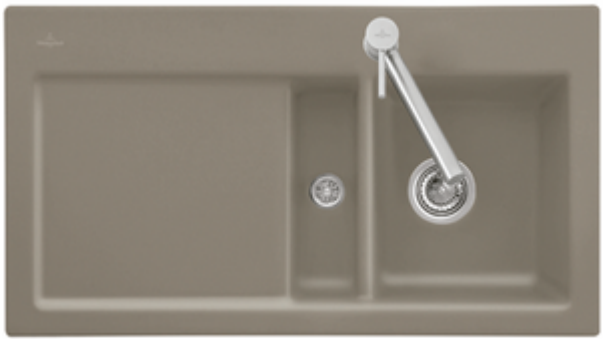

Article title	Villeroy & Boch Subway 50 Built-in sink, included Waste system pop-up, Espresso glossy
Article number	677302KS
Assembly / Assembly type	surface-mounted installation
Assembly instructions	minimum unit width: 50 cm
Scope of delivery	1 x sink , 1 x pop-up waste system 1 x cover cap, round
Collection	Subway 50
Colour name	Espresso glossy
Position of main bowl	Basin on left
Function of the drain fitting	pop-up waste system

TECHNICAL DRAWINGS

677302KS

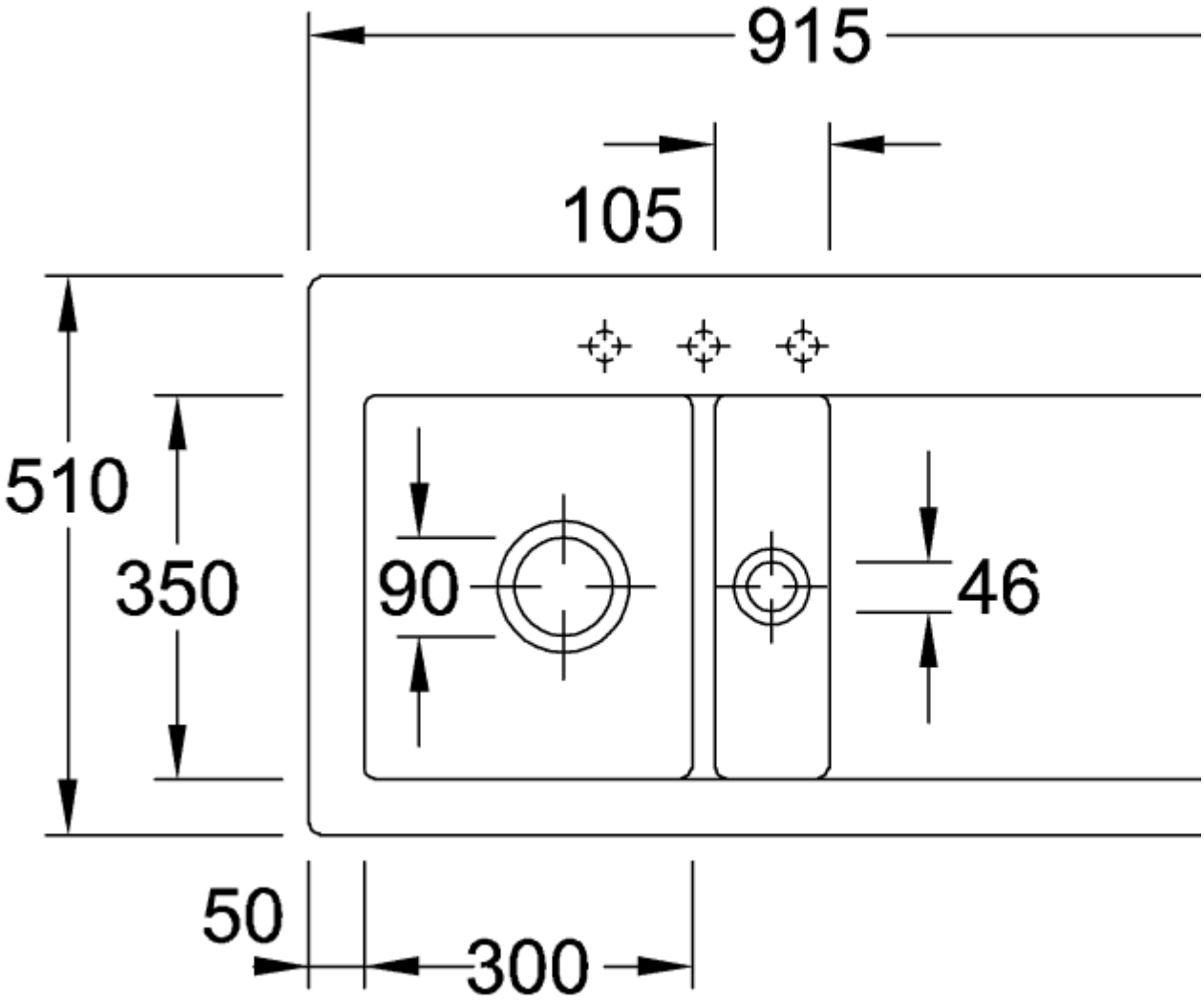
915
105
510
350
90
46
50
300

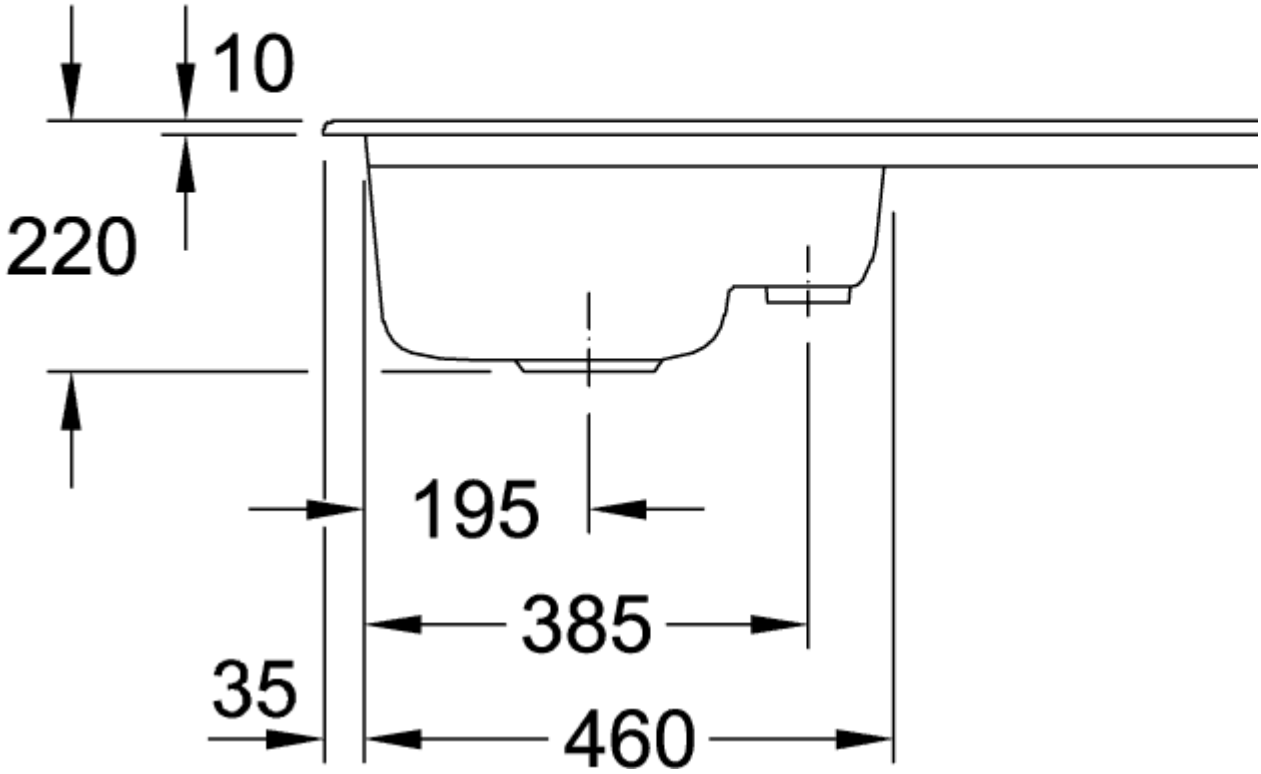
10
220
195
385
35
460
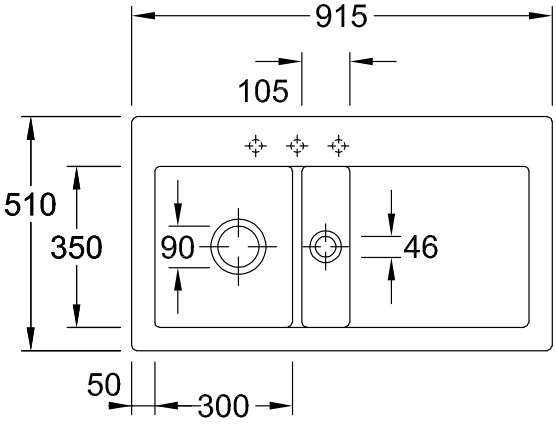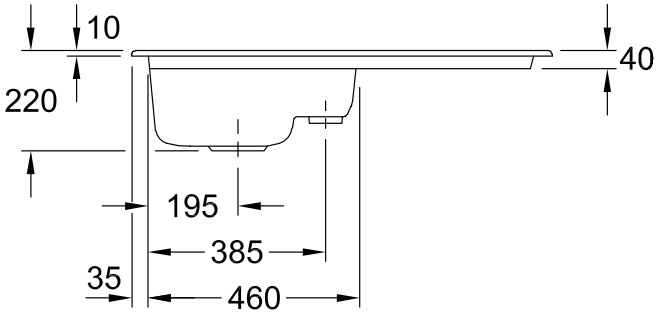
677302KS