ARCHITECTURA 80 BUILT-IN SINK RECTANGLE

PRODUCT INFORMATION

Article title	Villeroy & Boch Architectura 80 Built-in sink, included Waste system pop-up, of Ceramic, 1160 x 510 mm, White Alpin CeramicPlus
Article number	338002R1
Assembly / Assembly type	surface-mounted installation
Assembly instructions	minimum unit width: 80 cm
Scope of delivery	1 x sink , 1 x pop-up waste system 1 x cover cap, round
Length in mm	510
Width in mm	1160
Height in mm	220
Interior depth	200
Collection	Architectura 80
Material	Ceramic
Colour name	White Alpin CeramicPlus
Other material	Grate: Stainless steel Valve: Stainless steel
Position of main bowl	Basin, reversible
Function of the drain fitting	pop-up waste system
Colour designation	White Alpin
Other colour designations	Grate: Chrome, Valve: Chrome

TECHNICAL DRAWINGS

338002R1

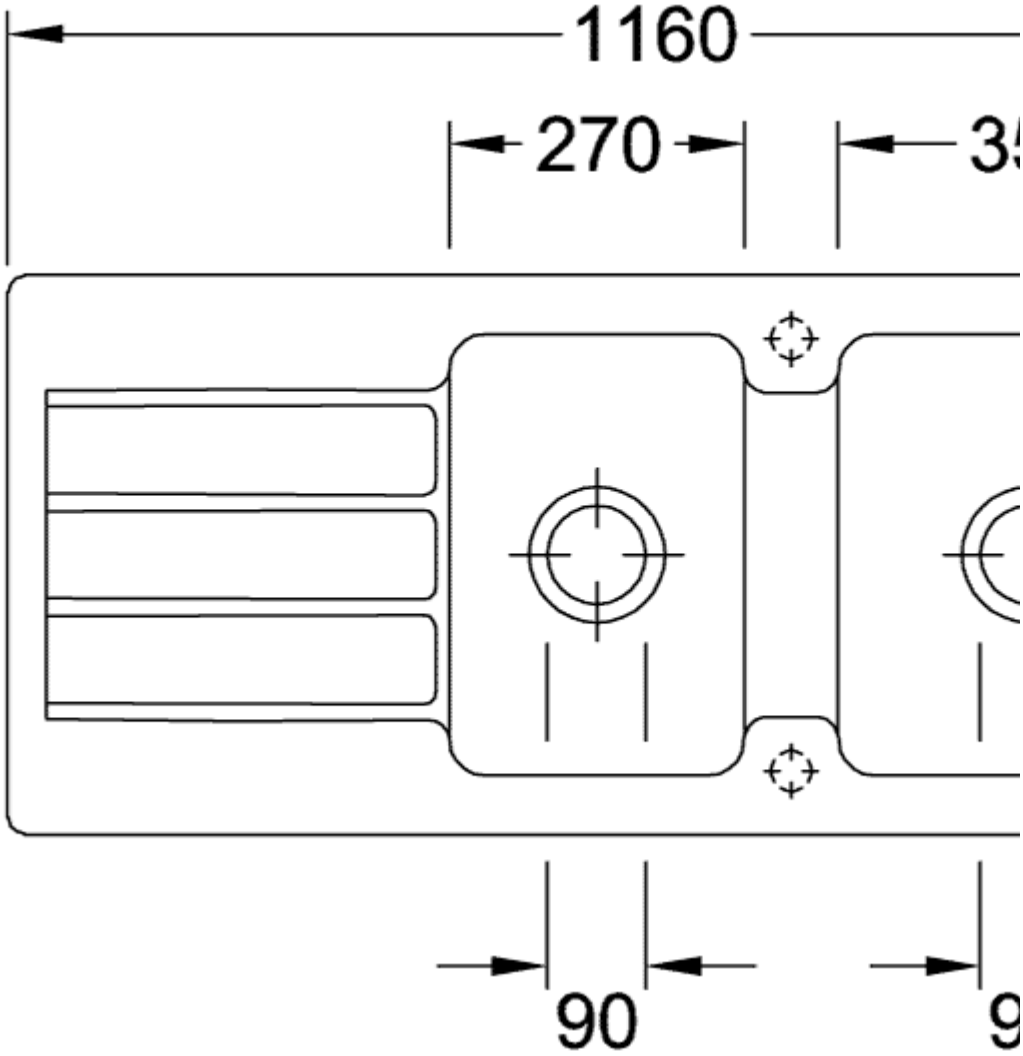
1160
270
90

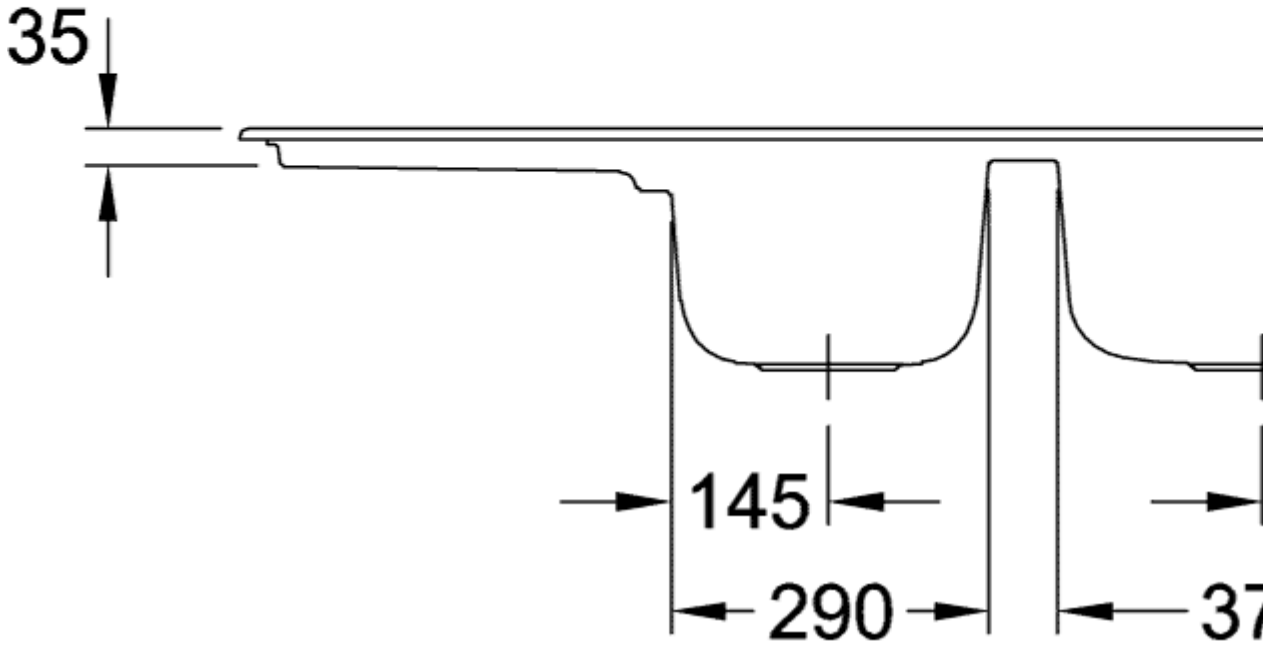
35
145
290
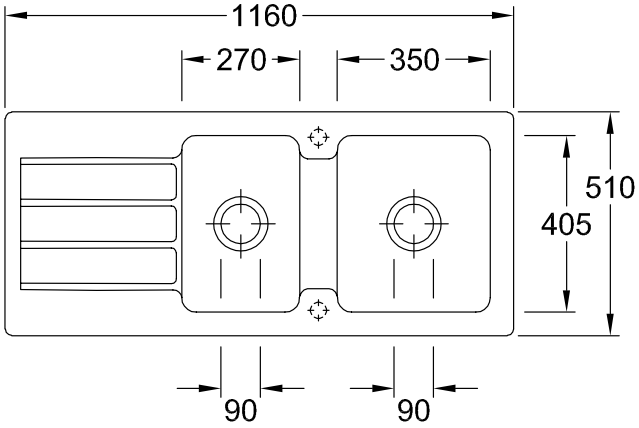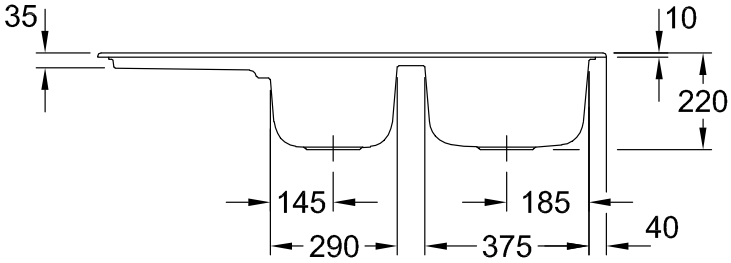
338002R1