# SINGLE-BOWL SINK SINGLE-BOWL SINK RECTANGLE

## PRODUCT INFORMATION

| | |
|---|---|
| Article title | Villeroy & Boch Single-bowl sink Single-bowl sink, included Waste system pop-up, Fastening set, of Ceramic, 595 x 630 mm, Timber CeramicPlus |
| Article number | 632062TR |
| Assembly / Assembly type | surface-mounted installation |
| Assembly instructions | minimum unit width: 60 cm, Installation on a cabinet or wall-mounted consoles. |
| Scope of delivery | 1 x sink , 1 x pop-up waste system 1 x cover cap, round 1 x fastening set for installation on an undersink cabinet |
| Length in mm | 630 |
| Width in mm | 595 |
| Height in mm | 220 |
| Interior depth | 180 |
| Collection | Single-bowl sink |
| Material | Ceramic |
| Colour name | Timber CeramicPlus |
| Other material | Grate: Stainless steel Valve: Stainless steel |
| Position of main bowl | Basin centred |
| Function of the drain fitting | pop-up waste system |
| Colour designation | Timber |
| Other colour designations | Grate: Chrome, Valve: Chrome |

# TECHNICAL DRAWINGS

**632062TR**

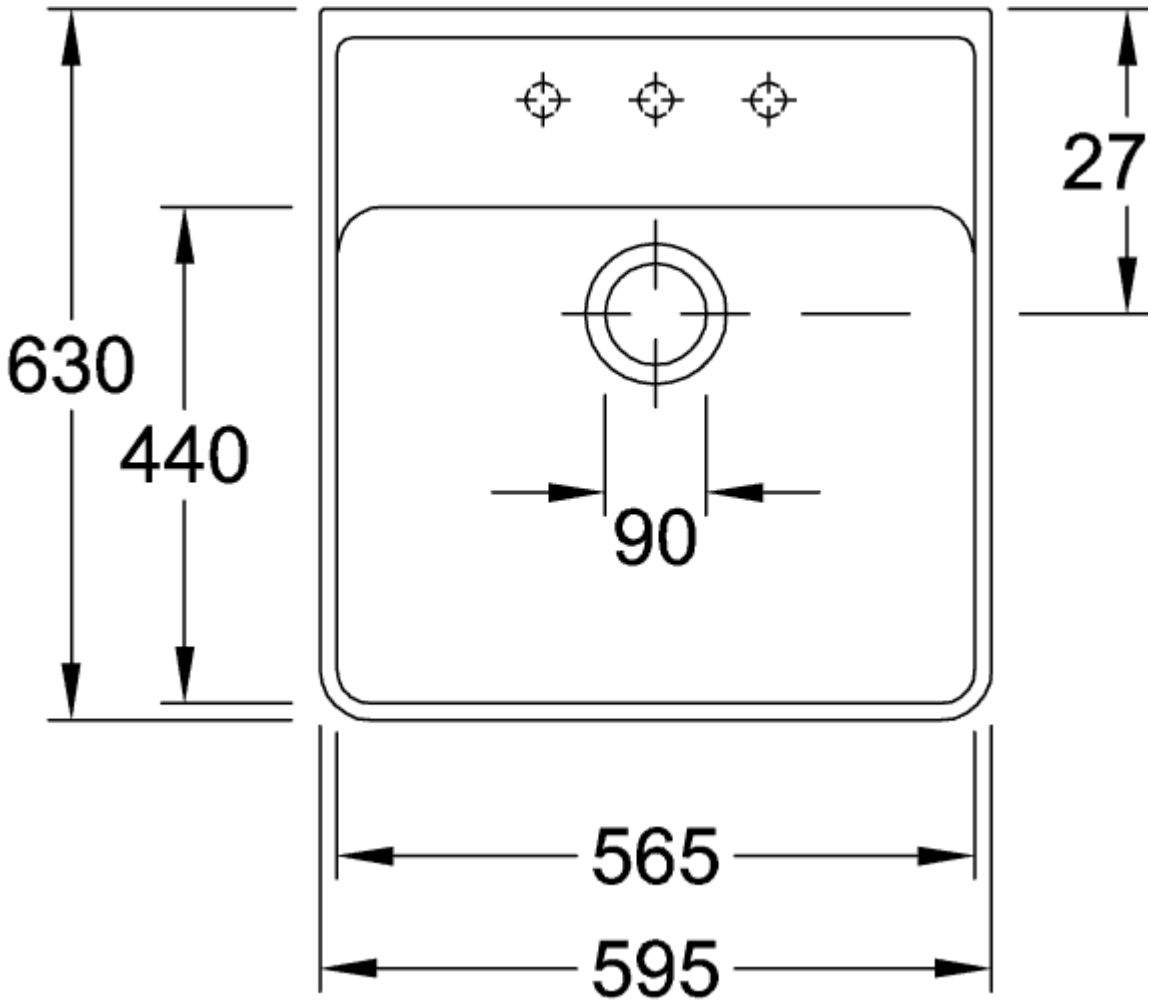
630
440
27
90
565
595

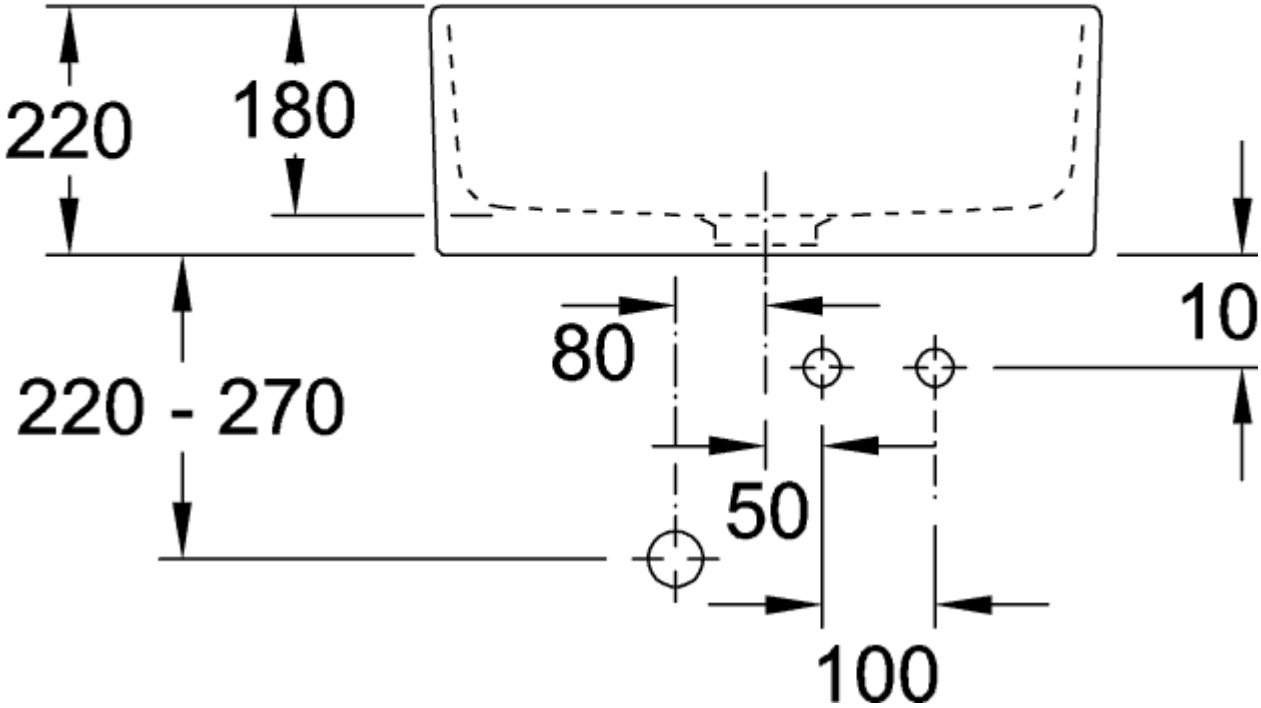
220
180
220 - 270
80
50
100
10
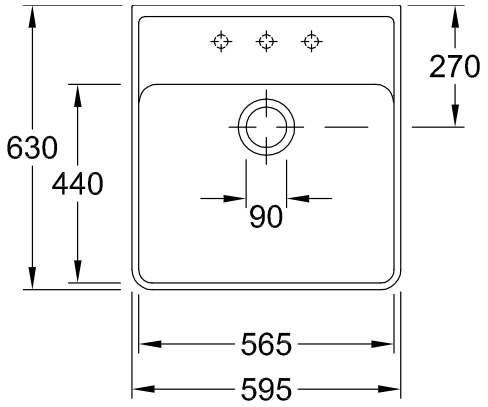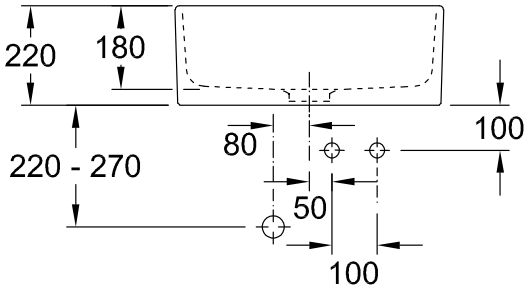
**632062TR**